Technical Data S3

Base machine
Specifications, speed, acceleration

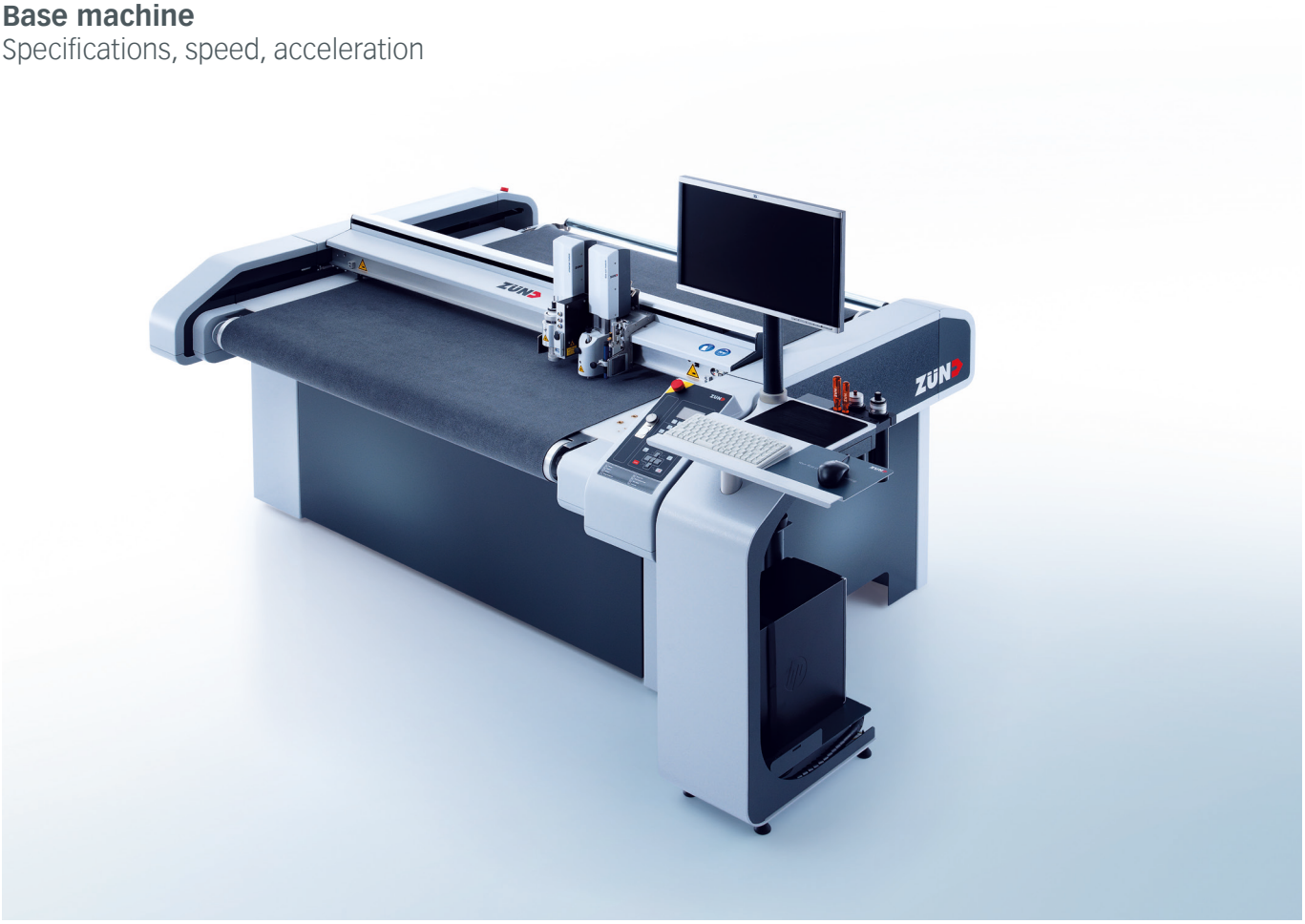

ZST-01-2018-m&k

Specifications

repeatability [1]	± 0,03 mm * / ± 0.001" *
position accuracy [1]	± 0,1 mm/m / ± 0.0012"/ft + repeatability *
floor load requirements	200 kg/m² / 45 lbs/ft²
interface	RS232C/V24, Ethernet 10/100Mbit
operating temperature	10 - 35 °C / 50-95 °F
relative humidity	10-80 % non condensing
noise emission	< 75 dB (depending on material and cutting technology)
max. material thickness	25 mm / 0.9"
max. material weight	10 kg/m² / 2 lbs/ft² (can affect the evenness of the working surface)
electrical requirements	3ph+N+GND, 208 V, 50/60 Hz, 20 A 3ph+N+GND, 400 V, 50/60 Hz, 16 A

Speed, acceleration [2]

max. speed X/Y-axis	1414 mm/s / 55"/s
max. acceleration X/Y-axis	14,1 m/s² / 555"/s²
max. speed Z-axis	500 mm/s / 20"/s
max. acceleration Z-axis	64 m/s² / 2520"/s²
max. rotation speed T-axis	110 rad/s
max. rotation acceleration T-axis	4602 rad/s²

1) X/Y drive system, static, at constant operating temperature (may vary depending on cutting tool/method).
2) Depending on cutter size, modules.

Technical data subject to change without notice.

Technical Data S3

Base machine
Dimensions, weight, material

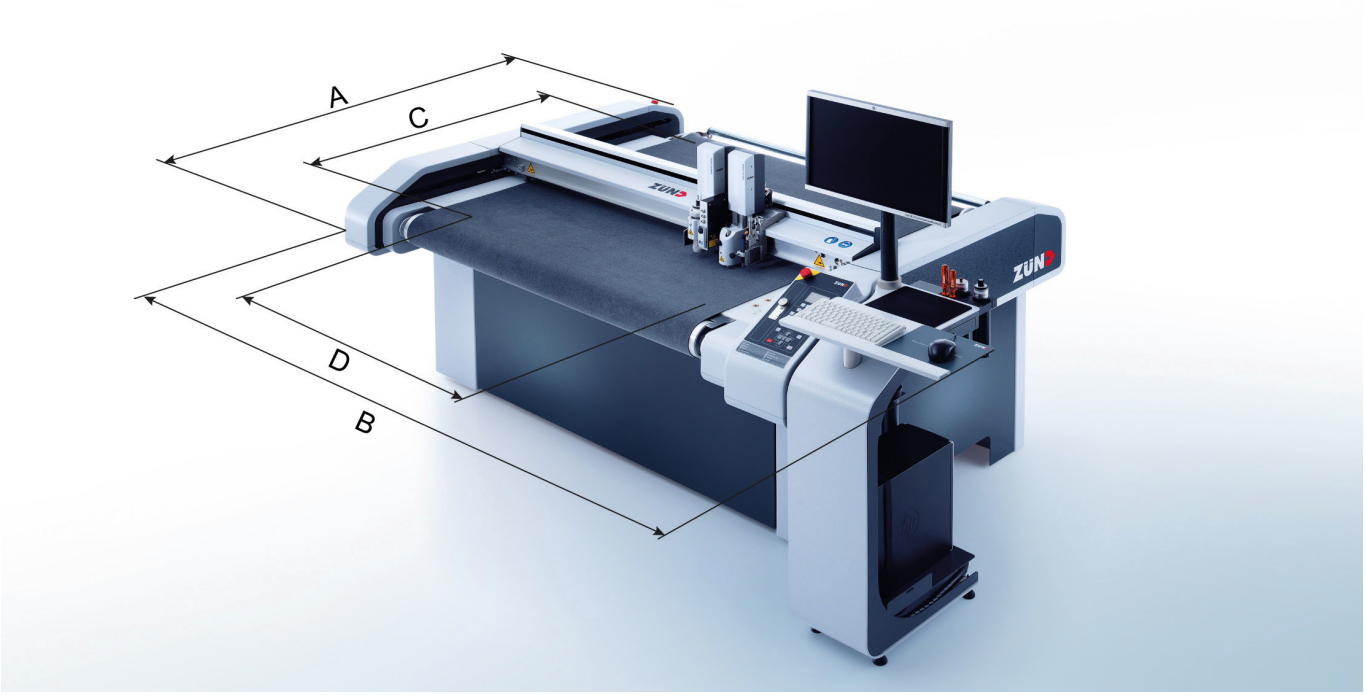

Type	Working area (C x D)	Overall dimensions, incl. workstation (A x B)	Machine weight
M-800	830 mm × 1330 mm / 32″ × 52″	1540 mm × 2610 mm / 60″ × 103″	420 kg / 925 lbs
M-1200	1230 mm × 1330 mm / 48″ × 52″	1940 mm × 2610 mm / 76″ × 103″	490 kg / 1080 lbs
M-1600	1630 mm × 1330 mm / 64″ ×52″	2340 mm × 2610 mm / 92″ × 103″	560 kg / 1235 lbs
L-1200	1230 mm × 1800 mm / 48″ × 70″	1940 mm × 3080 mm / 76″ × 121″	560 kg / 1235 lbs
L-1600	1630 mm × 1800 mm / 64″ × 70″	2340 mm × 3080 mm / 92″ × 121″	610 kg / 1345 lbs
XL-1200	1230 mm × 2270 mm / 48″ × 89″	1940 mm × 3550 mm / 76″ × 140″	620 kg / 1365 lbs

Type	max. materialwidth cutter with static work surface	max. materialwidth cutter with material transport
M-series	1580 mm / 62″	1330 mm / 52″
L-series	2050 mm / 80″	1800 mm / 70″
XL-series	2520 mm / 99″	2270 mm / 89″

Technical data subject to change without notice.

Zünd Systemtechnik AG
Industriestrasse 8 · CH-9450 Altstätten · T +41 71 757 81 00 · info@zund.com · www.zund.com

ZÜND
swiss cutting systems