Eastman

THE EASTMAN®
Eagle S125
Automatic Cutting System

Operator's Manual

Technical Support:
1-800-872-5595

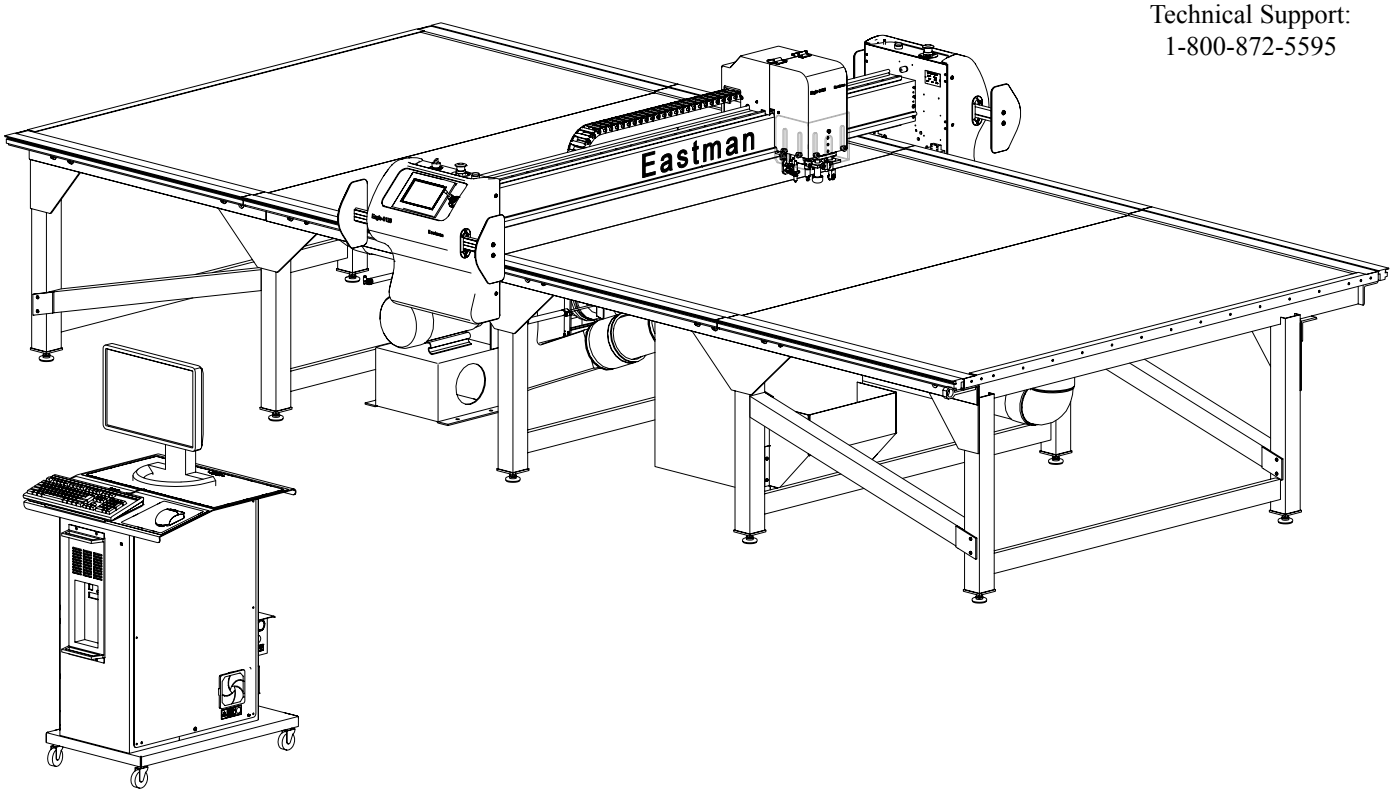

⚠ WARNING

This machine is equipped with a very sharp knife. Keep hands, arms, and hair away from the knife area at all times.

Misuse of this machine or failure to follow all safety instructions on this machine and in the instruction manual may result in serious personal injuries.

Eastman
Over a Century of Cutting Expertise

779 Washington St., Buffalo, N.Y. 14203-1396 U.S.A. • (716)856-2200 • Fax (716)856-1140 or (716)856-2068
Manufacturers of Eastman Cloth Cutting and Cloth Spreading Machines
Website: www.EastmanCuts.com

Form E-578

Congratulations

Congratulations in selecting an Eagle S125 Static Cutter. With over 100 years of experience in the cutting room, Eastman is a world leader in cutting equipment. Every Eastman employee takes pride in each machine we build and back it with unprecedented support. Our Technical Service department is made up of a dedicated staff of professionals with years of experience installing, troubleshooting and servicing the Eagle S125 Static Cutter. Each technician is familiar with all aspects of the machine including mechanical, electrical and software.

Eastman Machine Company provides technical support and on-site service as required. We offer several affordable Extended Warranty plans that allow you to continue the superior technical support well after the machine is past our standard warranty. If you require on-site technical support or would like to schedule a preventive maintenance visit or need additional training, please call our headquarters in Buffalo, NY to arrange for a technician.

Technical Support

Eastman Machine Company
779 Washington Street
Buffalo, NY 14203
Phone: 716-856-2200
Fax: 716-856-2068

Limited Warranty. Eastman warrants to the buyer that the equipment shall be free from defects in materials or workmanship for a period of 180 days commencing on the date of invoice. Any goods or parts claimed by the buyer to be defective must be returned to Eastman, freight charges prepaid, within the 180 day warranty period. If Eastman determines that the goods or parts are defective in materials or workmanship, Eastman's sole obligation under this warranty shall be, at Eastman's sole option, to repair or replace the defective goods or parts or to provide the buyer credit equal to the portion of the purchase price allocable to the defective goods or parts. This warranty should not apply if defects are caused by product misuse or neglect, if the machine has been altered or modified by the buyer or if other than genuine Eastman parts are used in the machine. THIS WARRANTY IS APPLICABLE TO THIS PURCHASE ONLY. SELLER DISCLAIMS ALL OTHER WARRANTIES, EXPRESSED OR IMPLIED, INCLUDING, BUT NOT LIMITED TO, THE IMPLIED WARRANTIES OF MERCHANTABILITY AND FITNESS FOR A PARTICULAR PURPOSE.

Limitation of Liability. Eastman's liability to the buyer, and the buyer's remedies from Eastman whether in contract, negligence, under any warranty or otherwise, shall be limited to the remedies provided in the foregoing Limited Warranty. In no event shall Eastman have any responsibility or liability to the buyer for (a) any special, indirect, incidental, or consequential damages, including, but not limited to, loss of use, revenue, or profit even if Eastman has been advised of the possibility of such damages, or (b) any claim against the buyer by any third party. The price stated for the product sold is a consideration for limiting Eastman's liability.

IMPORTANT

The purchaser must instruct all operators on the proper use of this equipment. All standard industrial safety measures and equipment should be provided to protect the operator. Operators must be cautioned that improper or careless use of this equipment may cause personal injury. If you do not have qualified operators to instruct new persons, contact your EASTMAN sales representative or EASTMAN factory direct.

Electrical connections and servicing to this equipment should be made by a qualified electrician who is familiar with applicable codes and regulations. Disconnect this equipment from electrical power source before proceeding with any disassembly for adjustment or repair.

Your Eastman ***Eagle Static Cutter*** is designed to operate at a high rate speed. All personnel should be instructed to wear safety glasses and stand well clear of the ***Eagle Static Cutter*** when in operation.

Table of Contents

General Presentation 4
- Overview 5
- General Safety Precautions 5
- Reference Manuals 6
- Recommended Spare Parts List 6
- Software Solutions 6
- Lifting/Moving 6
- Electrical Component Specifications 7

Familiarization 8
- Safety Zones and Stop Devices 8
- Eagle Static System 9

Main Functional Units 10
- Frame assembly 10
- Vacuum System 11
- Gantry Assembly 12
- Tool Head Assembly 13

Control Devices 16
- Take-on and Take-off Push Button Station 16
- Gantry Controls 17
- Key Board and Mouse Controls 19
- Variable Frequency Drive 19

User Interface Terminal 19
- Program State 19
- User Interface 20
- Navigation Buttons 20
- Function Buttons 20
- Display Screens 20

Table Layout 21

Theory of Operation 24
- Cutting Process 24
- SynqNet network 25

Critical Cutting Parameters 28
- Calibrations 28
- Mechanical Alignment 31

Startup Procedure 32
- Checks before Startup 32
- Startup Instructions 32
- Shutting down 33
- Cautions / warnings 33

Setup Procedure 34
- Setting up the Material on the Cutting Zone 34
- Setting up the Cut Parameters 34

Instruction for Aligning, Cleaning and Replacing Consumable Parts 35
- Round Knife Assembly 35
- Drag Knife Assembly 36
- Punch Assembly 37
- Round Knife 39
- Drag Knife 42
- Punch 44
- Removal of Plotter Pen to replace Pen refill 45
- Airbrush Ink refill 47
- Cleaning of Airbrush 47

Launching a Cut 50

Calibration Procedure 51
- Order of Calibration 51
- Checks before Calibration 51
- Tools Required 51

Operator Maintenance Operations 52
- Inspecting the Safety Devices 52
- Maintenance of User Interface Electronics 54
- Maintenance of Cutting Surface 56
- Maintenance of Tool Head 57

Notes 58

Service Records 59

Technical Data 60

Eastman®

Over a Century of Cutting Expertise

General Presentation

Eastman's Eagle S125™ Static Cutting Table provides superior cutting performance and increased throughput. Capable of marking, cutting, drilling and punching virtually any flexible material at speeds of up to 60 inches per second (152.4cm/s), the Eagle S125™ registers accuracy of +/- .015 inches (.4mm), with higher accuracies available. This machine can be configured to a width of 60 inch to 198 inch and for a length of 8 feet to 168 feet.

The user interface of Eastman Pro™ is virtually intuitive. The software makes it easy to control tool types, speeds, accelerations, and restart a file, or recut pieces. Eastman Pro™ aids efficiency by removing common lines, duplicate entities, and edge cuts.

Material is spread across the static table and its internal blower system ensures material hold-down for cutting accuracy. The gantry passes over the material, cutting with speed and accuracy.

The Gantry assembly is driven along the x-axis by dual motors located at each end of the gantry tube. The Y-carriage is supported on the gantry and is driven along the Y-axis by a single motor contained within the Y-carriage. The interchangeable tool head assembly is attached to the Y-carriage and contains either two or three spindles for cutting along with the theta axis motor. All electronics for driving the gantry and tool head devices are located adjacent to the component being driven or controlled. The electronics are interconnected throughout the system by a SynqNet network cable. The gantry also features a touch screen display, joy stick control and tool on/off switch.

An electronic enclosure is integrated within the frame assembly. Included within this assembly are the transformers, relays, circuit breakers, filters for the entire system.

The operator controls and manages the cutting process using the Eastman operating control software "Eastman Pro™". The "Eastman Pro™" software is a powerful, flexible and windows based program residing in the main CPU.

SynqNet is an all digital motion network specifically designed for high performance motion applications. SynqNet can perform all system level control and use one network for supporting motion control and Input /Output. SynqNet provides the facility of creating a motion network with centralized control and distributed hardware, which allows placing discrete Input / Output modules in more convenient locations for shorter cable runs.

SynqNet also makes it possible to troubleshoot the machine remotely. An operator can examine the status bits of the machine through software to get a clear indication of the error status for quicker maintenance and repair. SynqNet en-

Overview

Safety Information

Throughout this manual, safety information is presented by the use of the terms WARNING, CAUTION, ELECTRICAL HAZARD, and NOTE. These terms have the following meanings:

WARNING
A warning contains critical information regarding potential safety hazards that can occur during proper use or misuse of the machine. Failure to follow these procedures may result in serious personal injury to the user.

CAUTION
A caution contains instructions for the use or maintenance of the machine. Failure to follow these procedures may result in damage to the machine.

ELECTRICAL HAZARD
An electrical hazard calls attention to a procedure, practice, or the like, which, if not correctly performed or adhered to, could result in personal injury. Do not proceed beyond an Electrical Hazard.

NOTE
A note provides additional information or tips on the operation, maintenance and/or trouble shooting of the machine.

Safety and Indemnification

During the life of the machine, the purchaser agrees to provide to all machine users (including its own employees and independent contractors) all relevant safety information, including warning labels and instruction manuals. The purchaser also agrees to maintain the safety features and working condition of the machine, and to adequately train all users in the safe use and maintenance of the machine. The purchaser agrees to defend, protect, indemnify, and hold Eastman Machine Company and its subsidiaries harmless from and against all claims, losses, expenses, damages, and liabilities to the extent that they have been caused by the purchaser's failure to comply with the terms and instructions of this manual.

General Safety Precautions

WARNING

- This machine is equipped with very sharp and dangerous tools. Keep hands, arms, and hair away from the cutting area and drive system at all times. Use of Safety gloves, glasses, and appropriate clothing may prevent serious personal injuries.
- Disconnect the power and pneumatic supplies to the machine when it is not in use or during routine maintenance, including cleaning and lubrication.
- The purchaser must instruct all operators in the proper use of the machine according to the instructions in this manual. This training must include instruction on the potential safety hazards arising from the use or misuse of the machine. In addition to such training, the purchaser should provide written work instructions as necessary to ensure correct use of the machine for specific cutting and spreading applications.

- Do not modify this machine or disable safety features. Unauthorized modification may result in serious personal injuries to the user. Electrical connections to this machine must be made by a qualified electrician familiar with applicable codes and regulations.
- Safety labels must be kept clean and legible at all times. Call the Eastman Machine factory to order replacement labels.

Hearing protection devices are recommended for prolonged exposure to noise of the blower. Noise data is available at Eastman Machine.

The Eastman ***Eagle Static Cutter*** has been inspected and tested at the factory prior to shipment. The Eagle Static Cutter is shipped partially disassembled and requires some assembly and setup before operation can take place. Refer to the installation guide for installation instructions. To get the best performance, familiarize yourself and all operators with all functions and adjustments of this equipment. Refer to the Eagle Static Cutter service manual. Before any operation takes place it is important carefully read and follow the instructions in these reference manuals.

Reference Manuals

E-572... Eagle S125 Service Manual
E-566... Eagle S125 Illustrated Parts List
E-568… Eagle S125 Schematics Manual

Recommended Spare Parts List

Refer to Appendix A

Software Solutions

Eastman offers a wide variety of software for various applications. Please consult with your nearest Eastman Representative or the Eastman Factory directly, for more information.

Lifting/Moving

The lifting and moving of this system must be in accordance with the installation requirements. Failure to adhere to these installation requirements may cause injury to persons or hinder machines performance. Refer to installation manual.

Electrical Component Specifications

Specifications

Device	Voltage	Current	Frequency	Phase
Computer*	220 VAC	6 Amp	50/60 Hz	1
Control Power	208-230 VAC	20 Amp	50/60 Hz	3
Vacuum System	208-230 VAC	28 Amp	60 Hz	3
or	460-480 VAC	14 Amp	60 Hz	3

Note: The Control Power provides power to the computer, gantry, static table and DC power supplies. No additional electrical connections are required.

Familiarization

Safety Zones and Stop Devices

Pause Buttons and Stop Discs

The yellow button on top of both sides of the gantry will pause the machine when pressed. The machine will also go into a pause state if a stop disc on either side of gantry is pushed. Activating the pause function will execute a controlled stop of the cutter, while the machine remains fully powered. After releasing the pause button or resetting the stop discs and pressing NEXT on the UIT keypad, the cutter will resume cutting work in progress. Pressing ABORT will cancel the job. The cutting tool head can be moved using the joystick while in pause mode and then resumed.

Emergency Stop Buttons

There are red Emergency Stop buttons located on each side of the gantry as well as both corners of operator side. Pressing any of the Emergency Stop buttons will execute a controlled stop of the gantry before removing all power to the motors. To release an Emergency Stop condition, pull out the Stop button and then press the ABORT key on the UIT keypad or click the mouse on the E-Stop window. Emergency stop mats and light cur tains are also available as an option. Please consult the factory for pricing and availability.

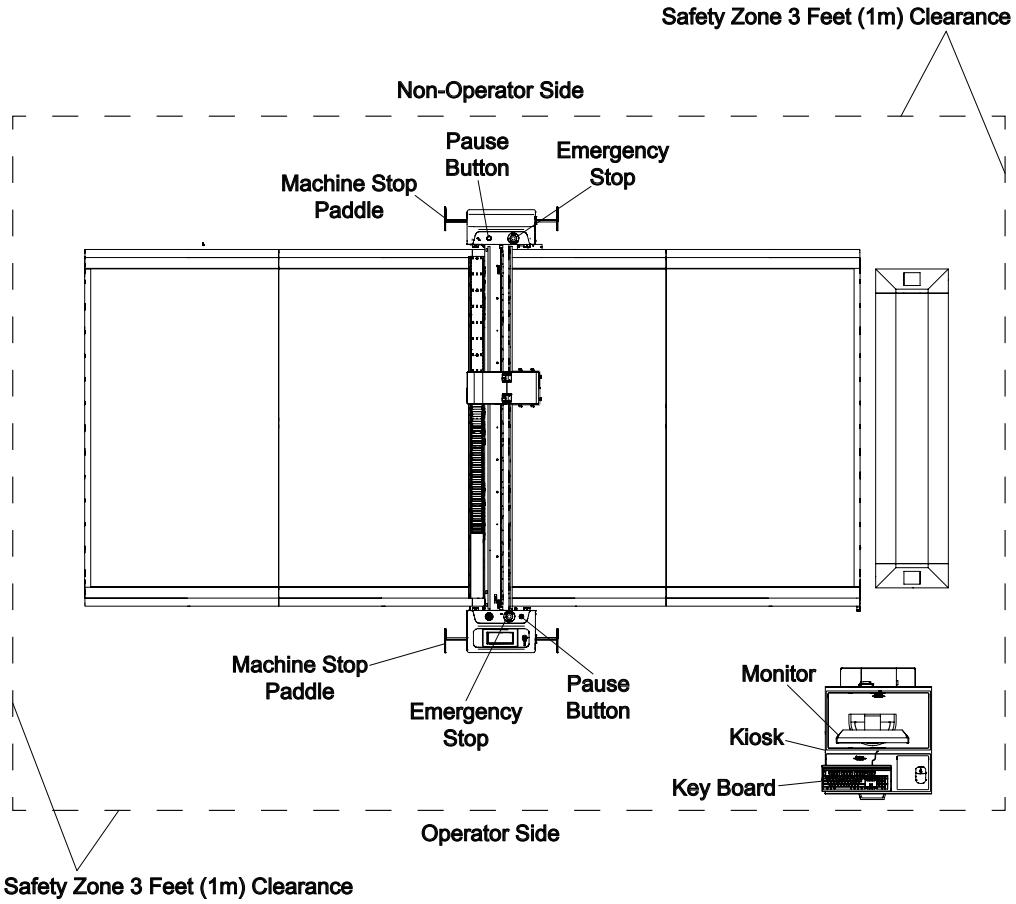

Eagle Static System

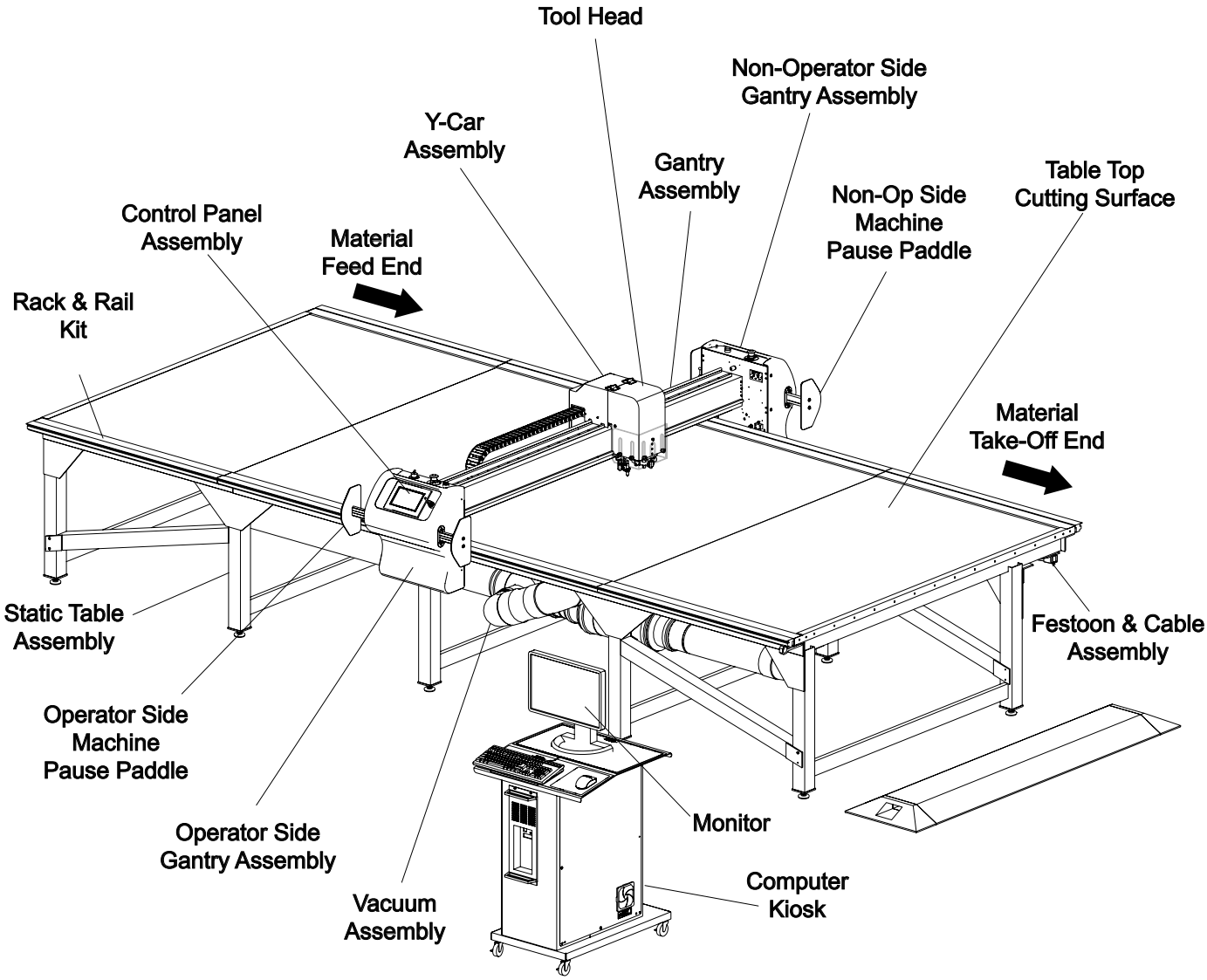

Main Functional Units

Frame assembly

The Eagle static machine frame is modular in design. The structure can be built into any length up to 108 feet long. The structure consists of table legs, angle supports and angle braces.

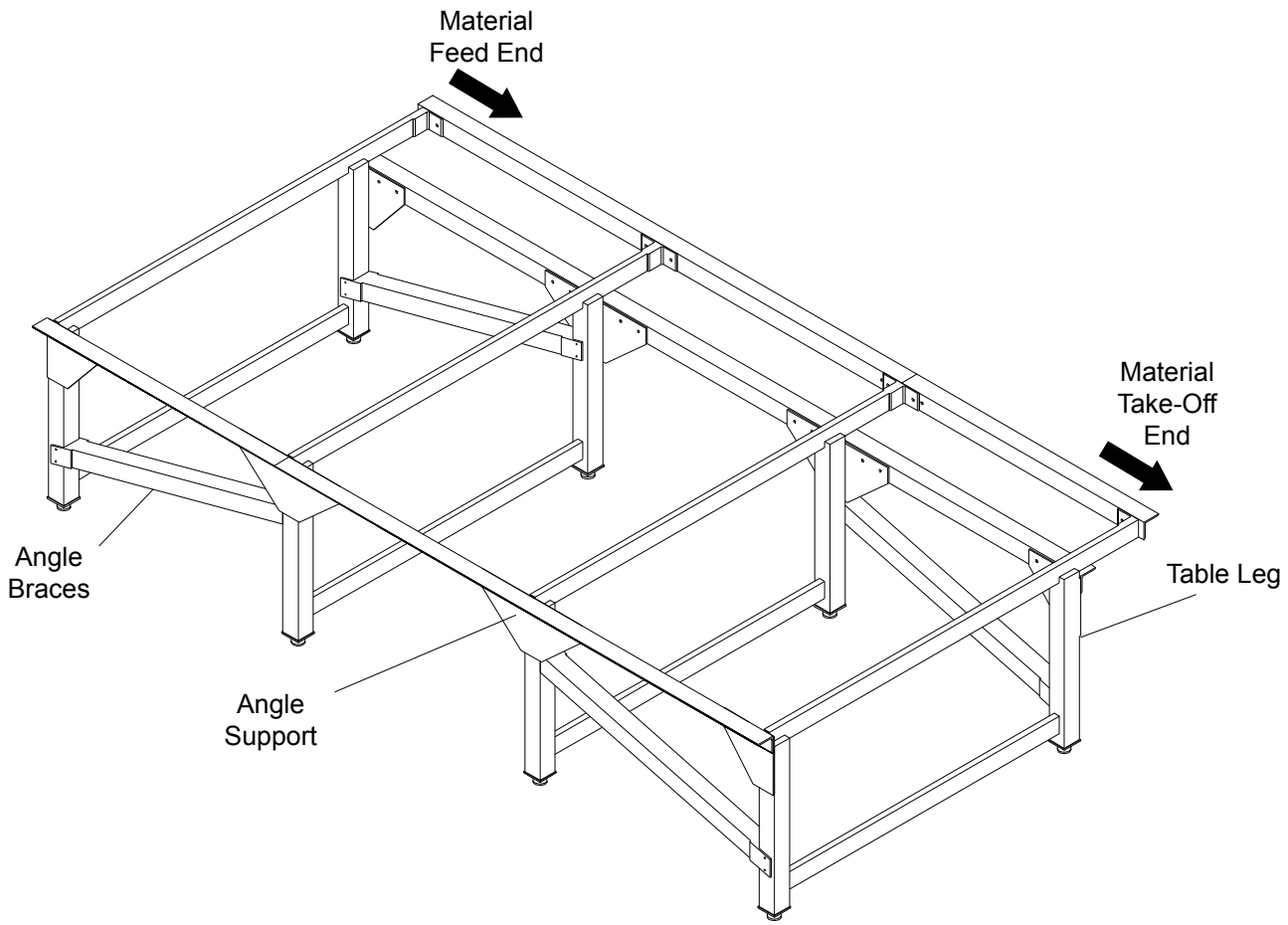

Vacuum System

The vacuum system is mounted underneath the frame structure. This system consists of a vacuum blower, muffler, and distribution duct. The vacuum blower has an integrated 7.5 HP motor with a single stage compressor within a single housing. The blower design is such that it fits under the frame structure and delivers 1500 CFM while operating at 14 inches of water. This allows a more compact system without having to use belt, pulleys or any other separate drive mechanisms.

The vacuum blower is intended for holding the material on the static table surface during the cutting operation. The vacuum silencer is integrated under the frame structure for quite operation and distribution of exhaust air. This also helps to decrease the audible noise observed by the operator.

The vacuum system is connected directly to the vacuum blower and ensures even distribution of vacuum and air flow to the vacuum plenums. The ducts transfer the air to the plenums which in turn distribute the vacuum force to the material to be cut.

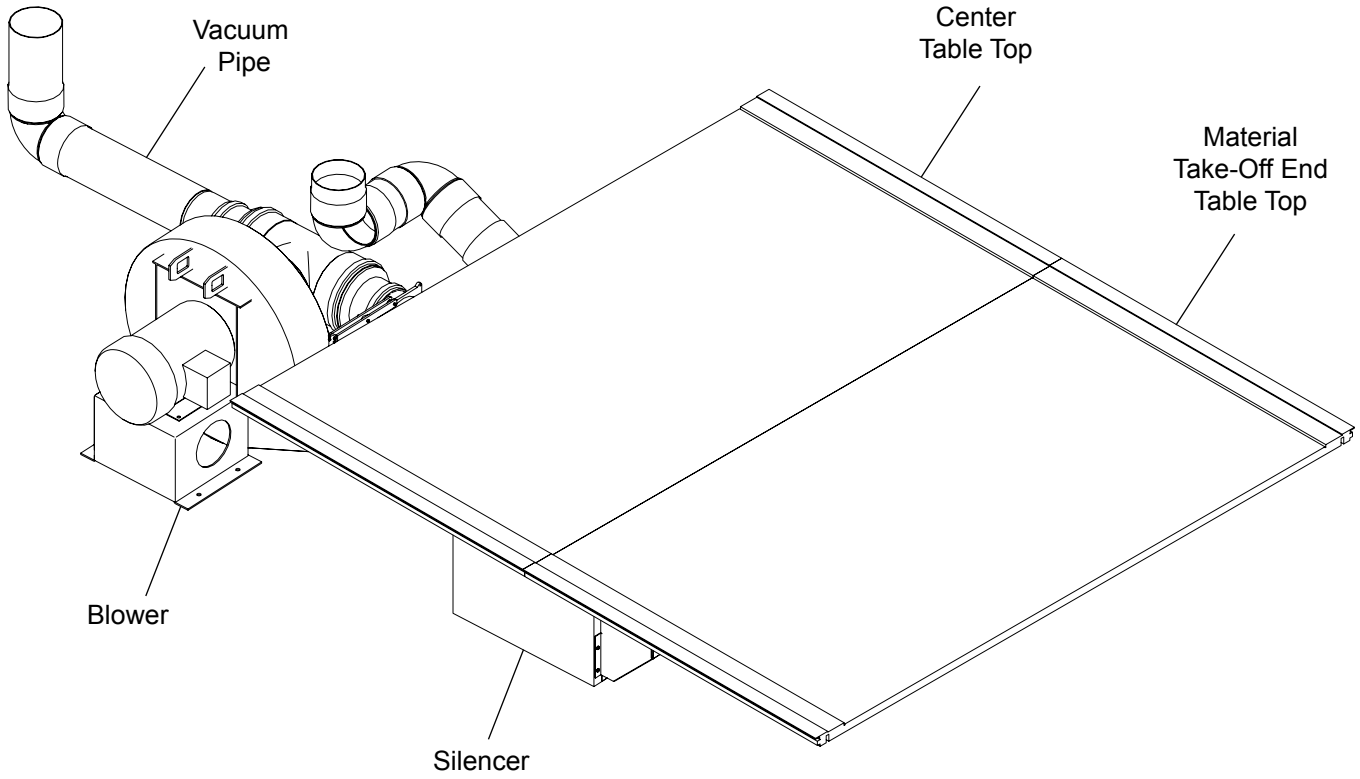

Gantry Assembly

The gantry assembly consists of the main tube assembly, operator side plate assembly, non-operator side plate assembly and the y-carriage assembly. The gantry assembly is a mobile unit that provides the controlled motion in the ‘X’ and ‘Y’ directions.

The gantry assembly contains one motor at each end of the main tube assembly. These motors are synchronized and move the gantry along the X axis on the guiding rails and linear racks located on both sides of the Static frame assembly. The cutting tool head is fixed on the y-carriage which slides on the main tube assembly. The motor for moving the toolhead along the Y axis is located on the Y-Car assembly.

The gantry assembly contains pause and emergency stop buttons on the non-operator side plate. The operator side plate contains a tool on/off switch, an emergency stop button, a joy stick control, a touch screen display and other controls which are explained in the control devices section.

Electronics and power for controlling and monitoring the motors and sensors are contained within their respective Operator Side Gantry, Non-Operator Side Gantry, and Y-Car assemblies. The electronics are connected to the main controller through the SynqNet network cables.

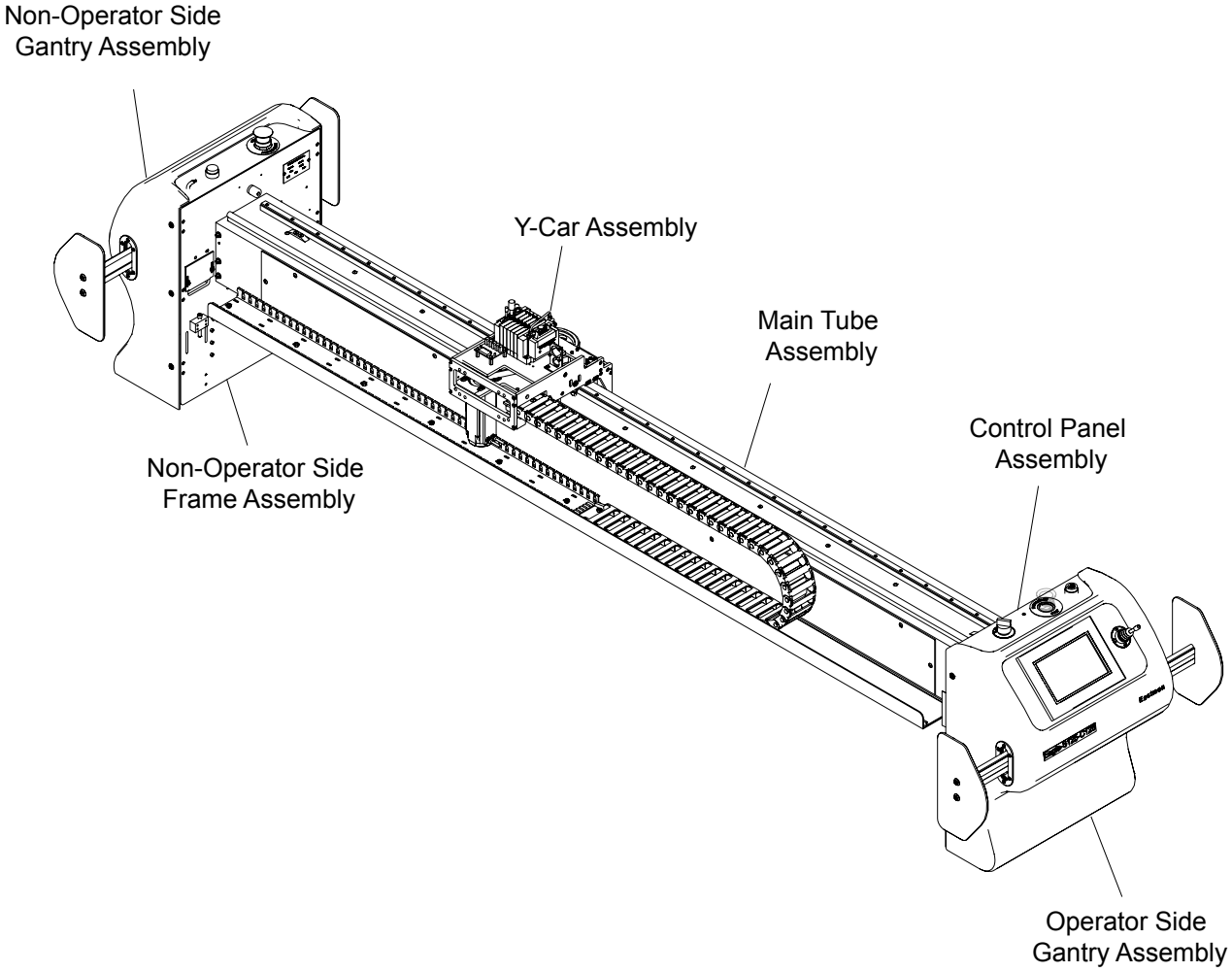

Tool Head Assembly

3 Spindle Tool Head

The tool head house a network of electromechanical, electrical sensors, and pneumatic components working together to accurately cut and mark materials as required by the operator. The tool head is capable of cutting, punching, and marking materials. The network of electromechanical, electronic sensors and pneumatics are controlled and monitored through the SYNQNET system.

This tool head has 3 active spindles which allow the user to mount 3 different tools to perform various cutting operations. Additionally the tool head can be configured with multiple marking systems. This mounts on the low position of the Y-car assembly which is then mounted on the gantry.

The electromechanical motor is brushless with encoder feedback to ensure smooth, guided and precise motion. The encoders provide a finite level of position and motion feedback allowing the control system software to respond to any circumstances in material cutting.

Controlled Pneumatic cylinders are used in the assembly to facilitate the required movements. The Pneumatics provides motion to each spindle activating the cutting tool mounted on that spindle. Also the tool head has additional marking systems such as airbrushes and pens which are controlled pneumatically.

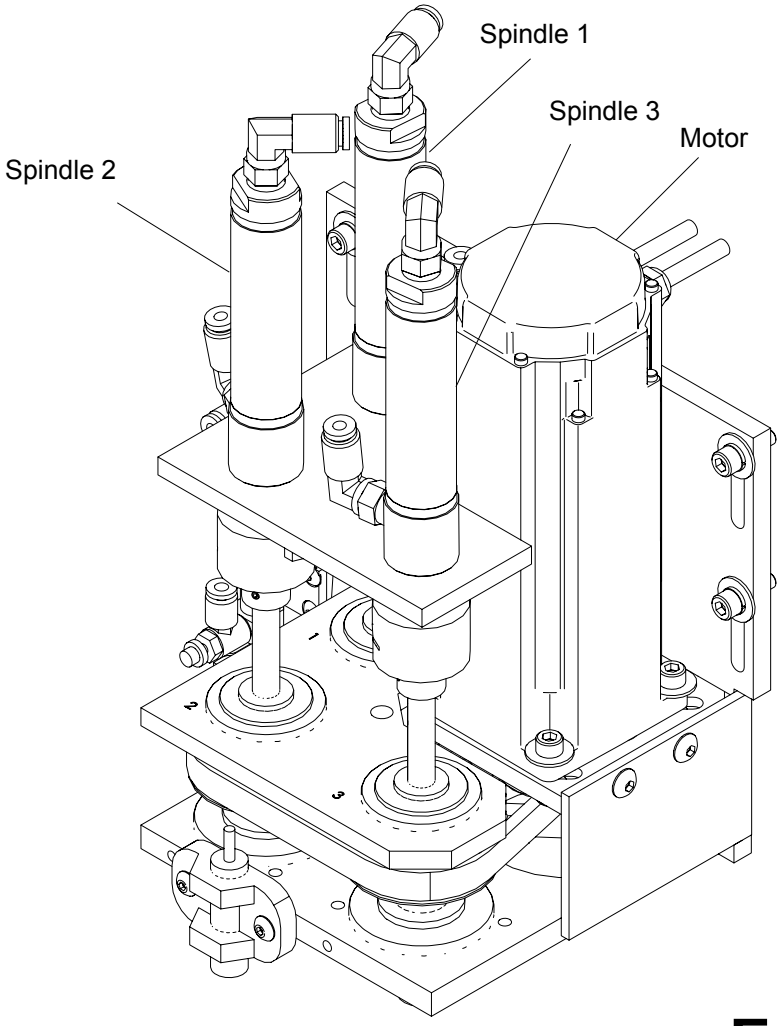

Heavy Duty and Fiber Tool Head

The tool heads houses a network of electromechanical, electrical sensors, and pneumatic components working together to accurately cut and mark materials as required by the operator. The tool heads are capable of cutting, punching and marking materials. The network of electromechanical, electronic sensors and pneumatics are controlled and monitored though the SYNQNET system.

These tool heads have two active heavy duty spindles which allow the user to mount two different tools to perform various cutting operations.

The heavy duty spindles are utilized to increase the rigidity of the tool head and increasing the accuracy of cuts. Additionally these tool heads incorporate larger diameter and cylinders to generate larger punch force for working with tougher materials. The heavy duty tool head will mount in the low position of the Y-car which provides greater stability to the tool head and keeps the tools close to the material for increased productivity by decreasing tool travel required.

The fiber tool head is manufactured with the same heavy duty spindles as the heavy duty tool head. This provides the same benefits with a greater stroke length. Mounting to the high position of the Y-car provides the user with greater clearance between the cutting surface and gantry. Additionally, these tool heads can be configured with multiple marking systems.

The electromechanical motor is brushless with encoder feedback to ensure smooth, guided and precise motion. The encoders provide a finite level of position and motion feedback allowing the control system software to respond to any circumstances in material cutting.

Controlled Pneumatic cylinders are used in the assembly to facilitate the required movements. The Pneumatics provides motion to each spindle activating the cutting tool mounted on that spindle. Also the tool head has additional marking systems such as airbrushes and pens which are controlled pneumatically.

Heavy Duty Tool Head

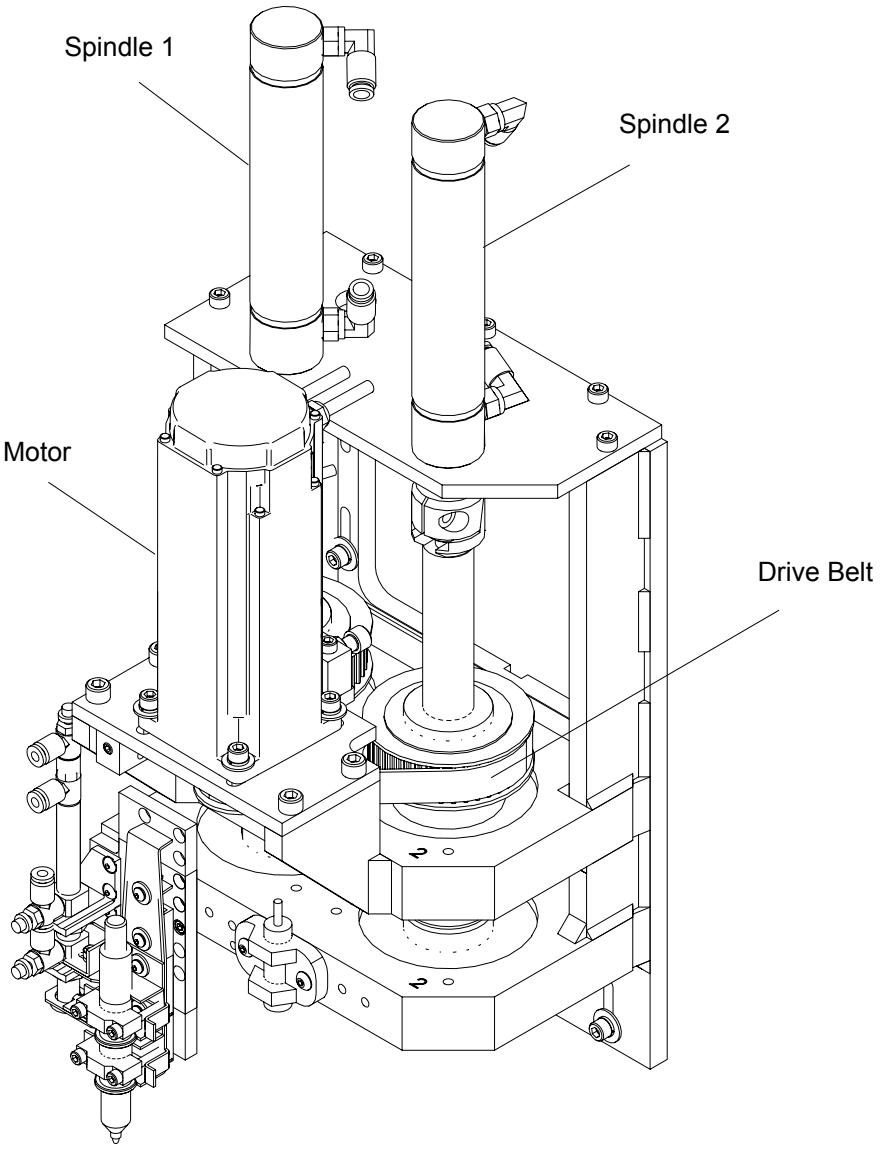

Fiber Tool Head

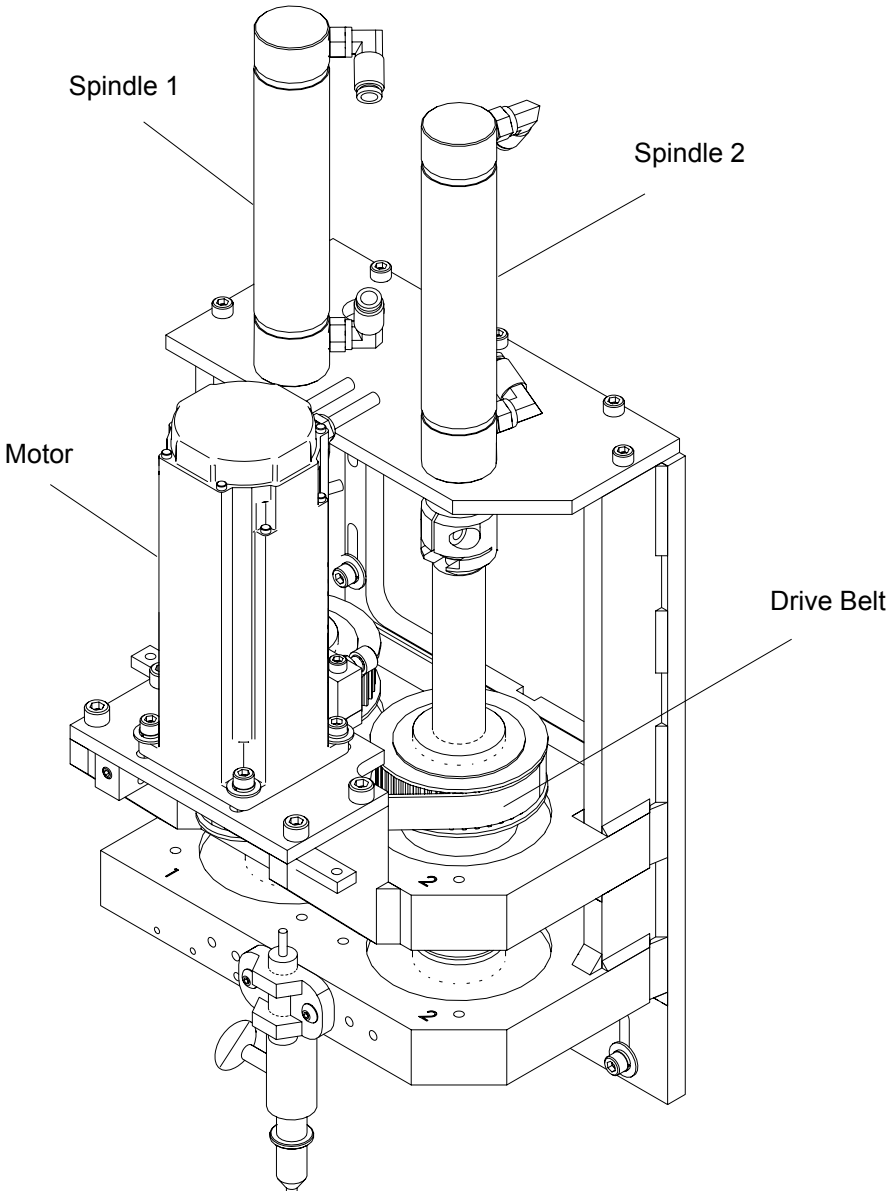

Control Devices

Take-on and Take-off Push Button Station

The push button station is available on both ends of the operator side of the eagle cutter. This station is a square box which has one mushroom head push button.

The emergency stop (E-stop) is a red button located on the front of the box. Pressing this button will stop the machine operation immediately, removing all power to motor amplifiers and motor controls. When the button is depressed red light glows. To return to an operational mode the button must be pulled up manually and then followed by resetting the software at the computer. This applies to all E-stop buttons available on the machine. An E-Stop will force the active cut job to be aborted.

Gantry Controls

The gantry has controls both on the operator side and non-operator side.

Non-operator Side

On the non operating side we can find two push buttons namely the pause button and the E-stop button. These buttons perform the same actions as E-stop and pause buttons which are located on the push button station. For details please refer to push button station.

The non-operating side also has stop disc controls. Pushing the disc from either side will pause the cutting action. When the stop disc is pushed to either side and when the machine enters the pause state the pause push button illuminates to alert the operator that the stop disc has been engaged. To resume the cutting operation the stop disc must be returned back to center, detented position. The operator can feel the disc moving to center, detented position and visually confirm when the pause push button light turns off. Refer to operator side controls to resume cutting operation.

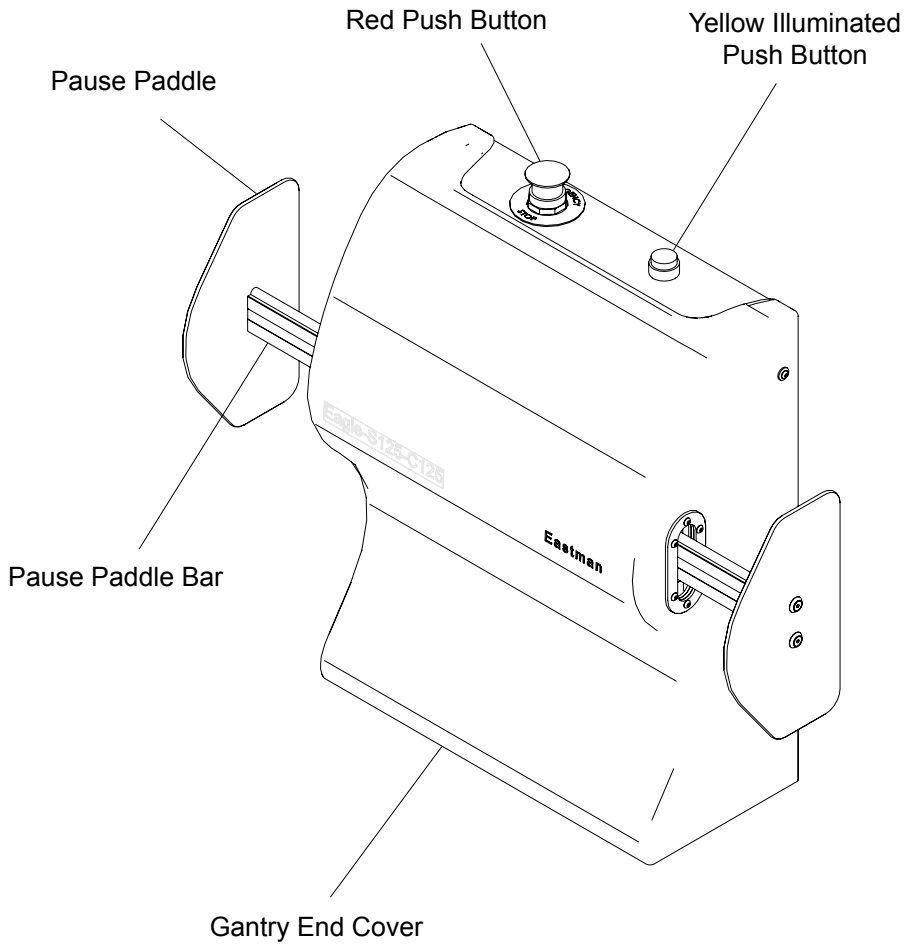

Operator Side

The operator side control has the following functions, Tool On/Off Switch, E-Stop Push Button, Pause Push Button, Joystick Controls, Touch Screen Display and Stop Discs.

The tool on/off switch is used to control the activation of the cutting tools. It should be turned to the on position in order to cut material during normal operation. Turning off the tool on/off switch suspends tool operation but still allows gantry movement. The E-stop and pause push buttons perform the same actions as the E-stop and pause buttons which are located on the push button station. The joy stick is used to move and position the gantry in the X and Y directions. There are 3 speed settings which can be selected by the operator on the touch screen to move the gantry. They are “Normal”, “Slow”, and “Extra Slow”. The “Slow” speed settings are primarily used to line up the laser pointer with the material prior to cutting.

The Touch Screen is used to perform various operations. Please refer to “Detail Description of Machine Control”.

The operating side also has stop disc controls and they perform the same operation as that of non-operator side. To resume cutting operation the operator must perform one of the following three actions i.e. press the “Next” button on the touch screen display, press the start button at one of the push button stations, or follow directions on the main computer monitor. When resuming, the cutting tool will be positioned at the exact coordinate it was paused, and then continue to cut the remainder of the marker.

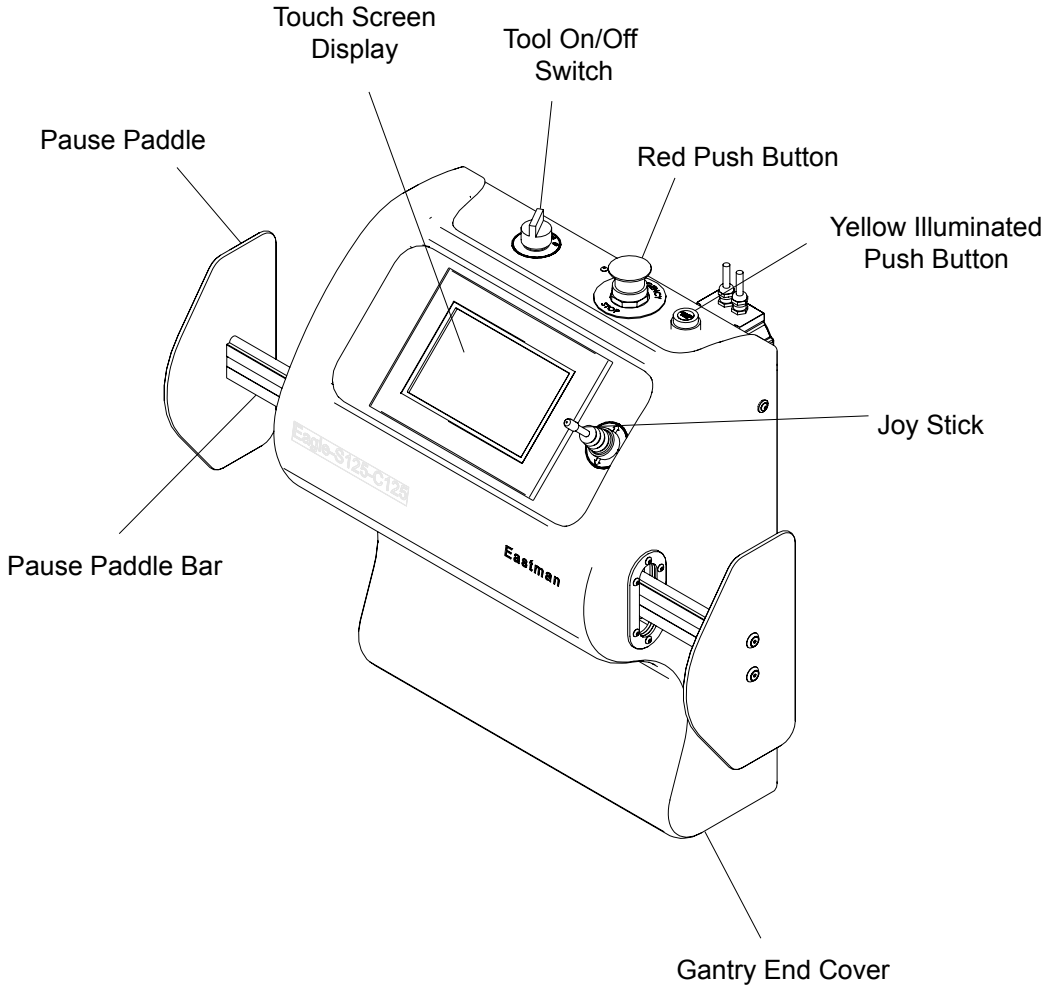

Key Board and Mouse Controls

The key board, mouse and monitor are located on a stand near the operator side of the table. They are used to open files, cut files, edit files, set machine and job parameters, and control cutting operation.

Variable Frequency Drive

The operating system for the eagle static cutter incorporates the use of a variable frequency drive (VFD) to manage and control the vacuum deliverable to the machine. The VFD unit should be mounted in a convenient location next to the eagle static cutter. The VFD is operated manually by the operator.

The use of the VFD gives the machine greater flexibility in types of material cut and makes the machine efficient in power consumption.

User Interface Terminal

The User Interface Terminal (UIT) is an operator's console mounted on the moving gantry of Eastman's automated cutting table. The UIT consists of a color display with touch screen capability and a set of ten programmable soft key buttons.

The UIT software presents a number of different display screens to the operator. Each screen contains command buttons, text inputs, edits boxes, and message fields that permit the operator to monitor and control table operations. The ten soft keys (five along each side of the display) have fixed functions assigned to them. These soft key functions are generally always available to the operator, regardless of the currently displayed screen. However, one or more soft keys may be temporarily disabled by the UIT's operating software during specific system states or operating conditions.

The UIT acts as a remote terminal for a PC based server program which actually performs all of the system control functions. The UIT has an Ethernet port that allows it to be connected to and communicate with the server program.

Program State

The UIT software can be in one of three states: initialization, operational or sleep.

The software enters the initialization state anytime if there is no Ethernet connection with the PC server. This will be the case each time the UIT is powered up and also any time that the Ethernet connection to the PC server is broken for any reason. During the initialization state, the software attempts to connect to the PC server. Once a connection is established all required hardware and software initializes. The only screen displayed during the initialization state is the Initialization Mode screen.

When the initialization state terminates, the UIT software enters the operational state. It is during this state that the operator performs all system monitor and control functions. All screens other than the Initialization Mode screen may be accessed when the UIT is in the operational state.

If there has been no soft key or screen input from the operator or no message received from the PC server for at least 3 minutes, the UIT enters the sleep state. The only difference between the operational state and the sleep state is that the UIT's screen is blanked and the display backlight is turned off during the sleep state. This is intended to extend the life of the display.

User Interface

The operator interacts with the UIT through a user interface that consists of ten soft keys and a 320 x 240 pixel display with touch screen capabilities. The operator uses this user interface to obtain information about the current system status and to execute system commands or alter system settings.

Navigation Buttons

The UIT has ten soft keys or buttons. Five soft keys are arranged vertically along each side of the display screen. The function of each soft key is determined by the UIT software. The function of each soft key remains fixed throughout execution of the software but one or more soft keys may be disabled by the software at times when its function is not applicable or appropriate.

The five soft key buttons along the left edge of the UIT screen are used for navigation between various UIT display screens. There are no PC server message commands associated with any of these buttons. The soft key buttons on the left edge of the UIT are, from top to bottom:

Cutting – displays the Cutting Mode screen.
Tools – displays the Tools Mode screen.
Calibration – displays the Calibration Menu screen.
Setup – displays the Setup Dialog screen.
More – displays the More Menu screen.

Function Buttons

The five soft key buttons along the right edge of the UIT give the operator quick access to frequently used table operating functions. Each of these buttons is associated with a PC server message command which is given in parentheses at the end of each buttons description. The soft key buttons on the right edge of the UIT are, from top to bottom:

Zero – sets the current pointer tool position as the local coordinate system origin. (ZERO)

Next – context-dependent function that starts or resumes an action. (NEXT)

Enter – context-dependent function that completes a response or confirms a request. (ENTER)

CheckRef. – initiates the process of locating the global coordinate system origin on the table.

(CHECKREF)

Abort – context-dependent function that abnormally or prematurely terminates an action.
(ABORT)

These ten soft key functions are always available to the operator, subject to certain specific restrictions as described in display screen menu.

Display Screens

The UIT software displays a number of different controls such as command buttons, scroll buttons, text labels. A multiple line text data grid to informs the operator of the current system status and allows the operator to execute system commands or alter system settings. Please refer to the topic “Detail Description of Machine Control” for more details.

Table Layout

The following diagrams identify the following machine location definitions:

Location	Definition
X-Axis Left Table Limit (Operator and Non-Operator)	It is the negative distance from X Home position to the left mechanical limit of the table.
X-Axis Right Table Limit (Operator and Non-Operator side)	It is the positive distance from X Home position to the right mechanical limit of the table.
Table Left	It is the negative distance from X Home position that determines the bite length.
Table Right	It is the positive distance from X Home position that determines the maximum cutting position.
X Home Position	It is the X distance from Table Zero.
Table Top	It is the distance from Y home position to the maximum positive cutting position set by the user by defining the cutting window.
Table Bottom	It is the distance from Y home position to the maximum negative cutting position set by the user by defining the cutting window.
Table Bite Cutting Region	It is the boundary formed by the table left in the X direction and the summation of Table Top and Table Bottom in Y direction. Both put together forms the bite length or bite cutting region.
Y-Axis Upper Table Limit	It is the positive distance from Y home position to the upper mechanical limit of the table.
Y-Axis Lower Table Limit	It is the negative distance from Y home position to the lower mechanical limit of the table.
Y Home Position	It is the Y distance from Table Zero.
Table Length	The table length is the distance from X-axis left table limit to X axis right table limit. Table length is the physical pre-defined factory setting length and this cannot be changed or altered.

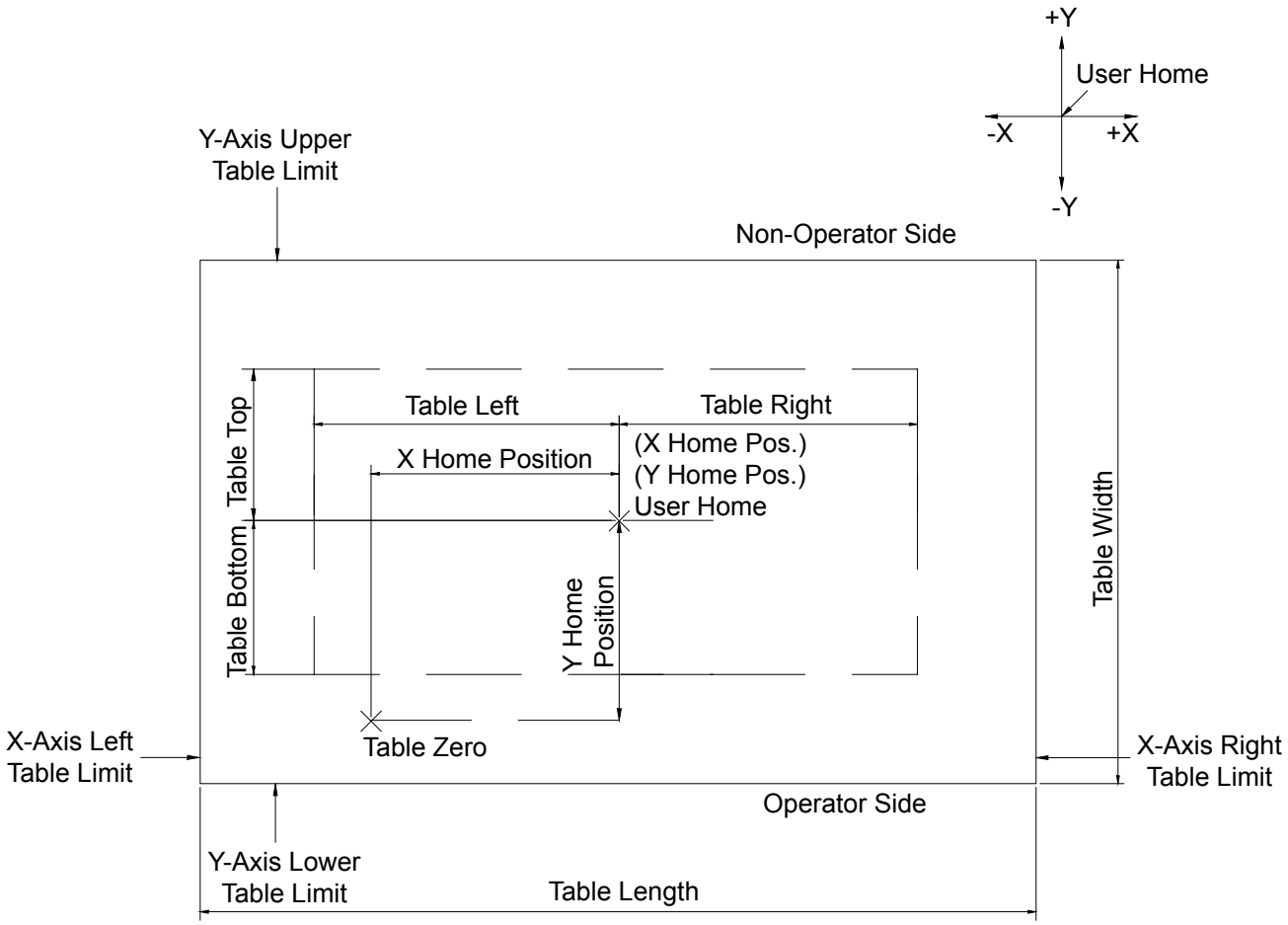
+Y
User Home
-X
+X
-Y
Y-Axis Upper
Table Limit
Non-Operator Side
Table Left
Table Right
Table Top
X Home Position
(X Home Pos.)
(Y Home Pos.)
User Home
Table Bottom
Y Home
Position
Table Width
Table Zero
X-Axis Left
Table Limit
X-Axis Right
Table Limit
Operator Side
Y-Axis Lower
Table Limit
Table Length

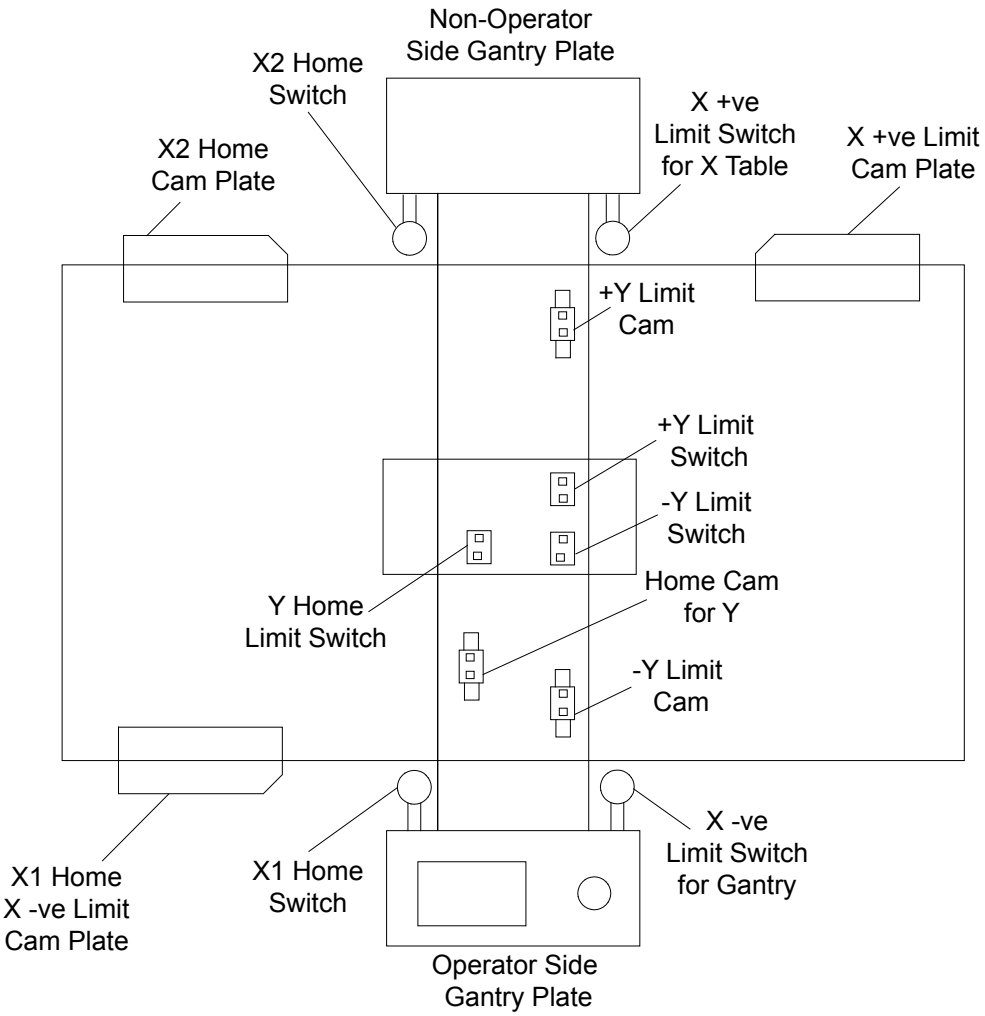
Non-Operator
Side Gantry Plate
X2 Home
Switch
X +ve
Limit Switch
for X Table
X +ve Limit
Cam Plate
X2 Home
Cam Plate
+Y Limit
Cam
+Y Limit
Switch
-Y Limit
Switch
Home Cam
for Y
Y Home
Limit Switch
-Y Limit
Cam
X -ve
Limit Switch
for Gantry
X1 Home
X -ve Limit
Cam Plate
X1 Home
Switch
Operator Side
Gantry Plate

Theory of Operation

Cutting Process

Cutting cycle

- The operator selects “cut” option in eCut menu.
- The vacuum system turns on.
- The operator types “Zero” or selects “Zero” in the UIT.
- Then Theta turns to home position.
- The operator types “Next” or selects “Next” in the UIT.
- The system checks the vacuum level.
- The knife moves to the laser pointer position.
- Theta turns to its initial cutting position.
-

Now the cutting begins.

SynqNet network

The Eagle static cutter Architecture is based on a distributed motion control network. This means that all communication to and from motors, inputs and outputs occurs over a ring topology network. As can be seen from the related graphic, the network starts and ends at the computer. Starting with cable S1 we leave the computer and visit every node (motor, inputs and/or outputs) on the network and return back to the computer. This provides two paths to each node allowing a built in communication redundancy. If one of the “S” network cables becomes inoperable, the machine can still communicate with the computer successfully. It will also alert the operator about the existing problem and still be able to cut files normally.

In addition to the redundant network, the major cables for each axis of motion are color coded based on their function as follows:

Network “S” Cables - These cables come in two colors **Purple** and **Black**. The Purple Network cables are continuous flex rated and are found at points of motion on the machine. The Black Network cables are standard flex and are found along the stationary network paths.

Power “M” Cables – These cables are **Orange** in color and provide power from the amplifiers to the motor.

Feedback “F” Cables – These cables are **Green** in color and provide feedback from the Hall Sensors and Encoder on the motor to the amplifier.

Control “I/O” Cables – These cables are **Grey** in color and connect the amplifier to axis specific inputs and outputs on the Custom I/O Block.

If the operator has access to Microsoft Corporation’s Visio program, he can open the Eagle Static machine graphic on a computer. Once open, if the operator moves the mouse over any component on the graphic, a pop-up box will tell the operator what the part name and number is. This improves efficiency when troubleshooting or ordering replacement parts.

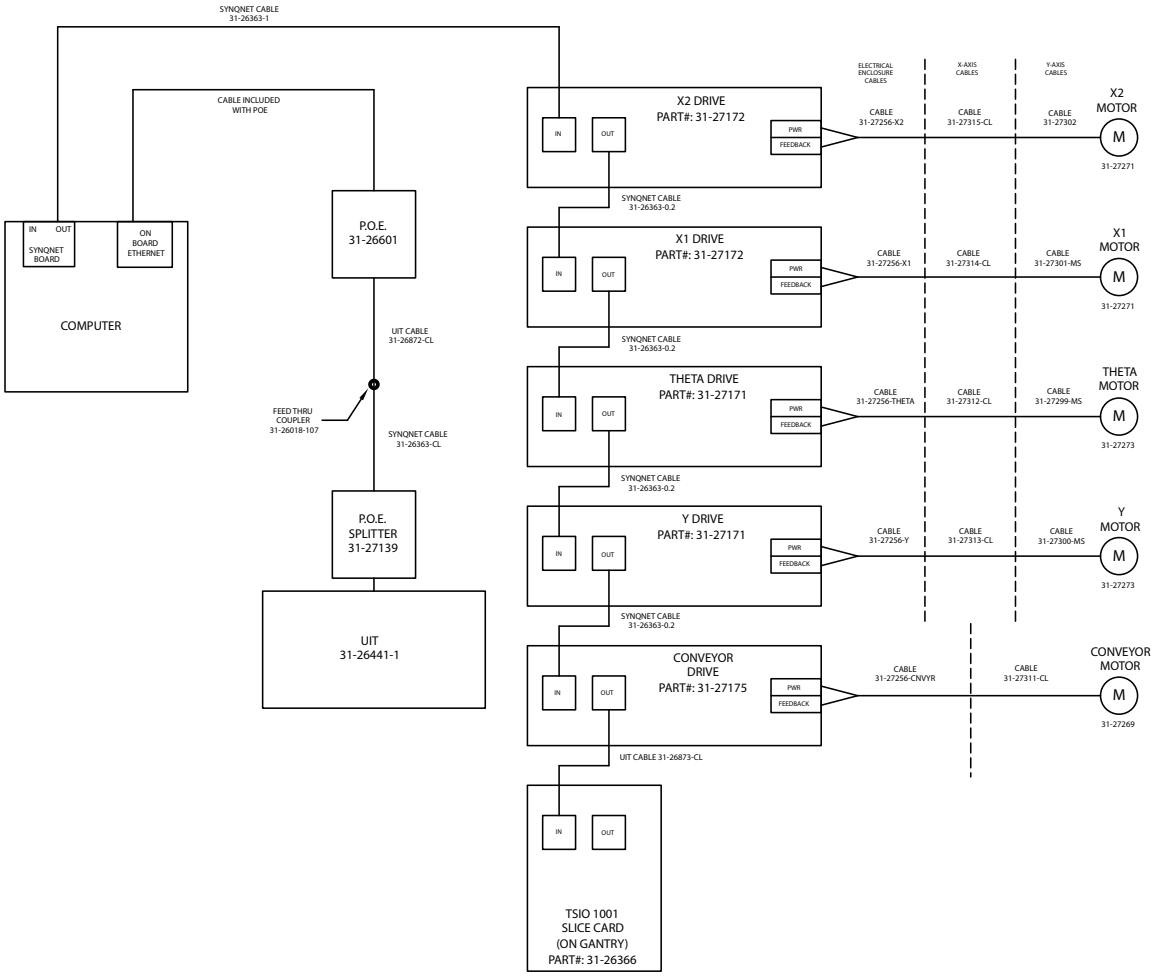
SYNQNET CABLE
31-26363-1
CABLE INCLUDED
WITH POE
IN
OUT
SYNQNET
BOARD
ON
BOARD
ETHERNET
COMPUTER
P.O.E.
31-26601
UIT CABLE
31-26872-CL
FEED THRU
COUPLER
31-26018-107
SYNQNET CABLE
31-26363-CL
P.O.E.
SPLITTER
31-27139
UIT
31-26441-1
ELECTRICAL
ENCLOSURE
CABLES
X-AXIS
CABLES
Y-AXIS
CABLES
X2 DRIVE
PART#: 31-27172
PWR
FEEDBACK
CABLE
31-27256-X2
CABLE
31-27315-CL
CABLE
31-27302
X2
MOTOR
M
31-27271
SYNQNET CABLE
31-26363-0.2
X1 DRIVE
PART#: 31-27172
CABLE
31-27256-X1
CABLE
31-27314-CL
CABLE
31-27301-MS
X1
MOTOR
M
31-27271
SYNQNET CABLE
31-26363-0.2
THETA DRIVE
PART#: 31-27171
CABLE
31-27256-THETA
CABLE
31-27312-CL
CABLE
31-27299-MS
THETA
MOTOR
M
31-27273
SYNQNET CABLE
31-26363-0.2
Y DRIVE
PART#: 31-27171
CABLE
31-27256-Y
CABLE
31-27313-CL
CABLE
31-27300-MS
Y
MOTOR
M
31-27273
SYNQNET CABLE
31-26363-0.2
CONVEYOR
DRIVE
PART#: 31-27175
CABLE
31-27256-CNVYR
CABLE
31-27311-CL
CONVEYOR
MOTOR
M
31-27269
UIT CABLE 31-26873-CL
TSIO 1001
SLICE CARD
(ON GANTRY)
PART#: 31-26366

Critical Cutting Parameters

Calibrations

The following parameters are critical for cutting. The operator must ensure that these are calibrated correctly before starting the cut.

Theta offset

The theta offset is the theta compensation for tool misalignment so that the knife can cut parallel to the direction of travel.

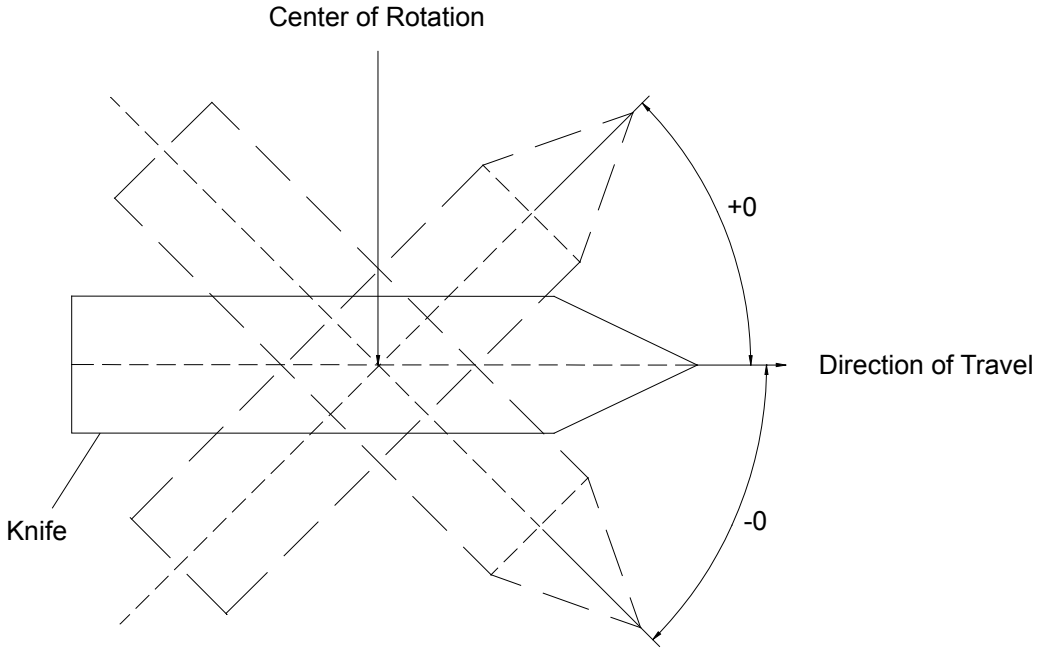

Normal offset

The normal offset is the side by side blade compensation to correct for misalignment of the knife to the machine cutting position.

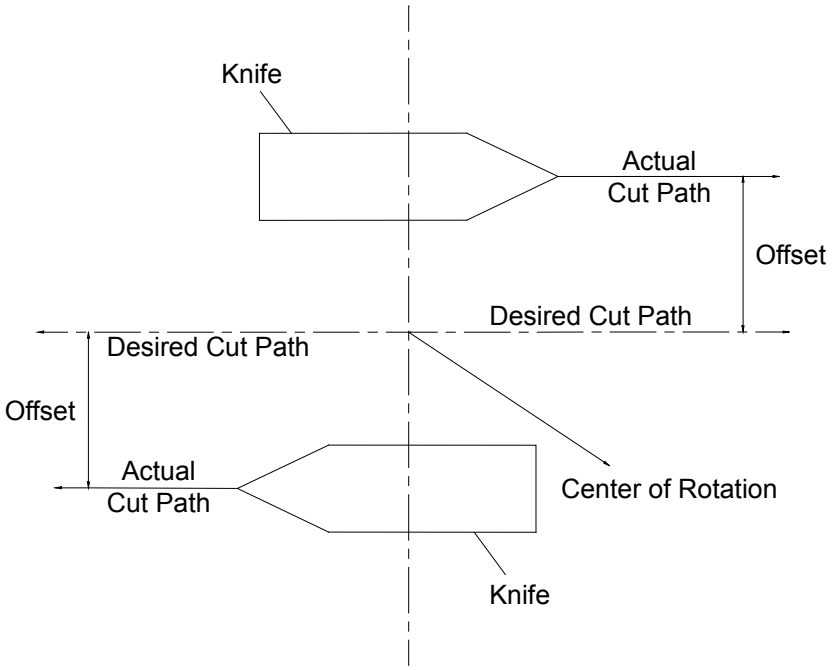

Blade Lead

The Blade Lead setting is used to adjust the leading edge travel of a knife at the end of a cut, thereby controlling over cut.

Blade Trail

The Blade Trail setting is used to adjust the trailing edge travel of a knife at the starting of a cut, thereby controlling over cut.

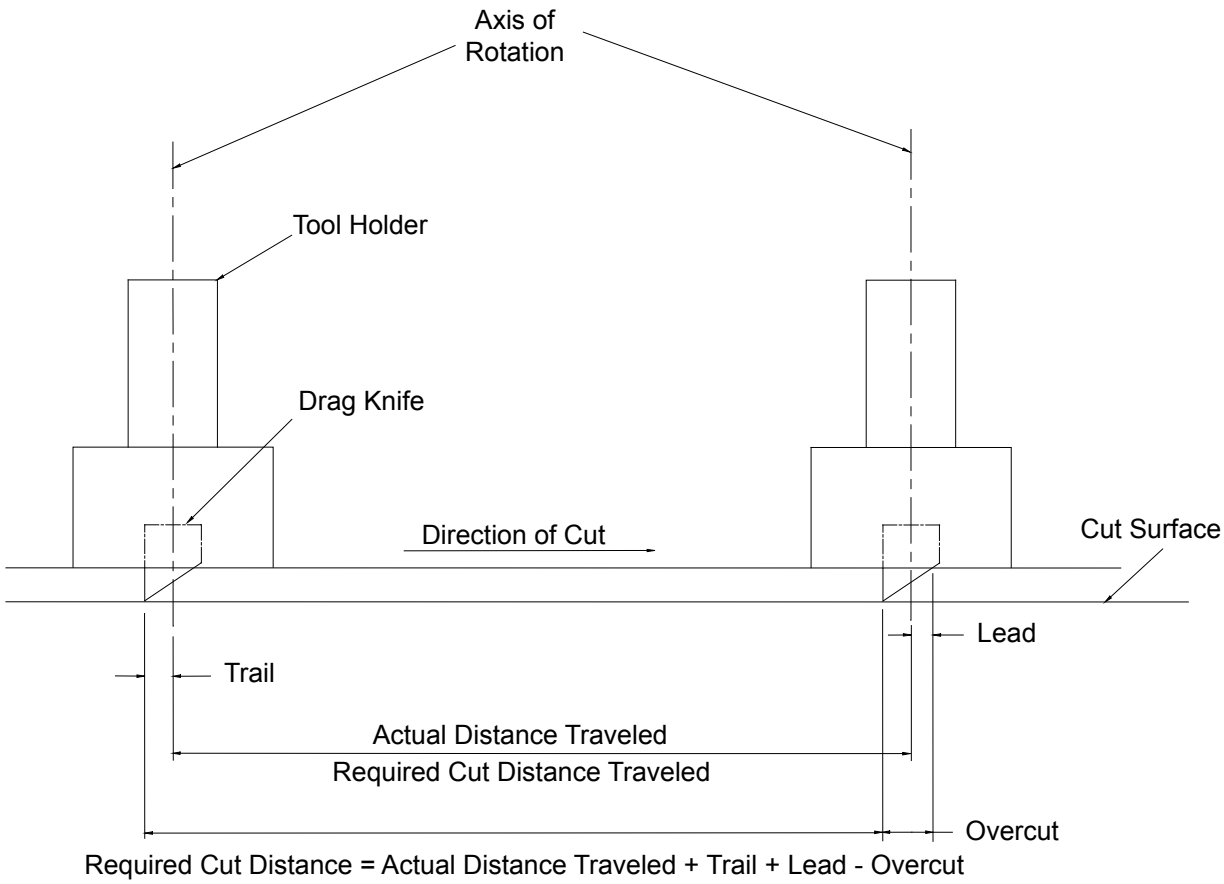

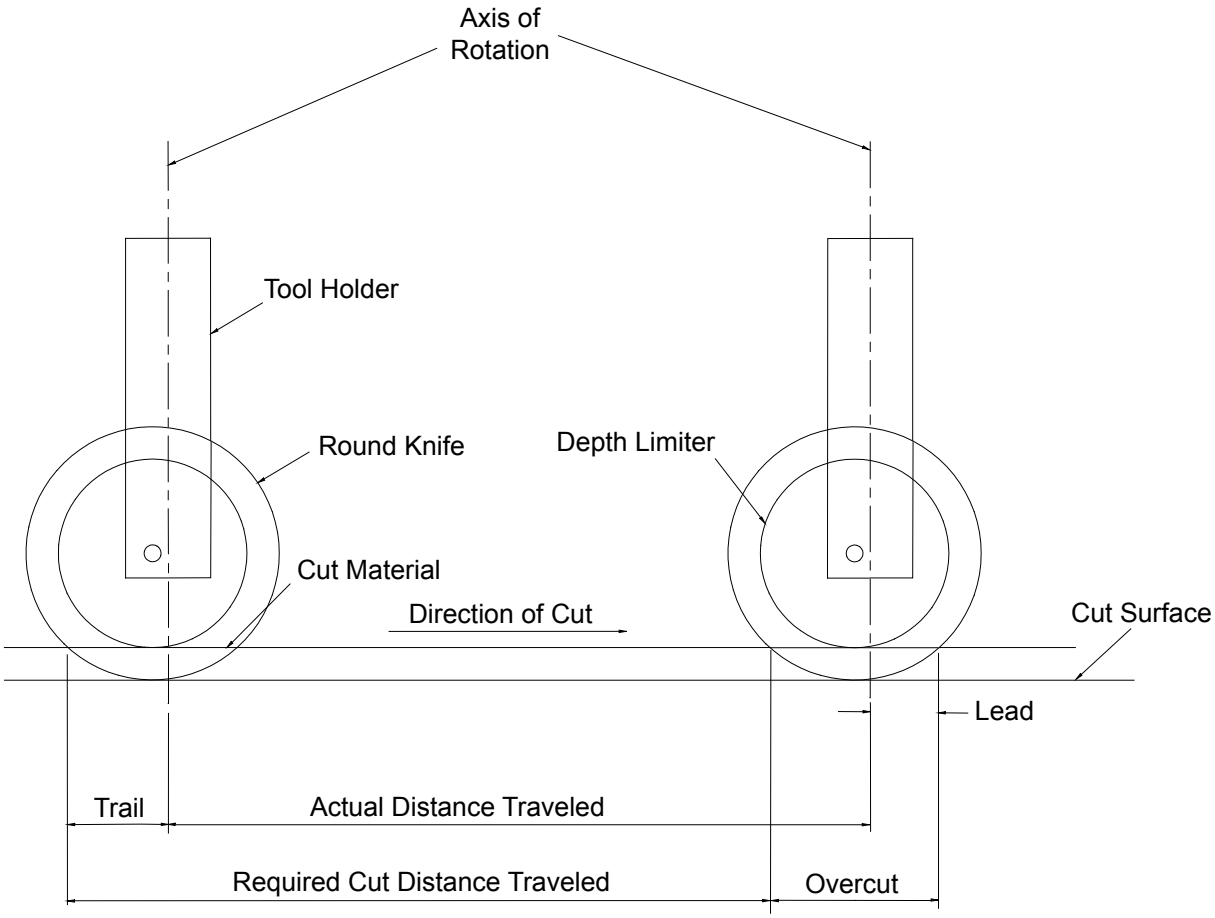

Required Cut Distance = Actual Distance Traveled + Trail + Lead - Overcut

Mechanical Alignment

The below mentioned items are critical for alignment, please refer to service manual for detail description.

- Gantry alignment and leveling.
- Toolhead alignment and leveling.

Startup Procedure

Checks before Startup

- Ensure that the table surface area is free from any obstructions.
- Ensure that all safety covers (Tool head cover, Gantry cover) are secured.
- Check that all the doors (electric cabinets, computer cabinets) are closed.
- Make sure that no one is standing inside the safety zone.
- Ensure that the emergency stops are disengaged and the stop discs are in their neutral positions.
- Ensure that all cables are connected and locked. Refer to the installation manual for cable connections.

⚠ **WARNING**

- Improper depth setting of knife will result in damages to the table surface.

Startup Instructions

- Turn on power to the VFD using the disconnect switch provided by your facility. Turn on the VFD.
- Turn on power to the machine using the disconnect switch provided by your facility.
- Turn on the compressed air supply using the disconnect switch provided by your facility.
- Turn on the Eagle Static Cutter main power switch located on the electronics box under the take-off end of the table.
- Open the front cabinet cover of computer and turn on the main power switch.
- Start the eSuite software.
- Now find the Home switches and Limit switches as described below.
- When you start the eSuite software a dialog box displays the message “Do you want to look for home switch positions”. Click the Yes button.

⚠ **WARNING**

- Responding with “yes” will cause the gantry and tool head to move. Ensure that there are no obstruc tions to the motion.
- A second dialog box displays the message “Do you want to check table limits”, Click the Yes button.

WARNING

Responding with “yes” will cause the gantry and tool head to move. Ensure that there are no obstructions to the motion.

At the completion of the above startup procedure, the toolhead and gantry will be located at the home position.

Shutting down

- Exit the eSuite software application.
- Shut down the computer using start / shut down / windows commands.
- Turn off the main power switch located on the electronics box under the take-off end of table.
- Turn off the VFD power by pulling handle on the disconnect to the off position.
- Turn off the machine power using the disconnect switch provided by your facility.
- Turn off compressed air supply using the disconnect switch provided by your facility.
- Execute proper lock out / tag out procedures as required by your facility.

Cautions / Warnings

- Keeps hands away from the cutting area.
- Ensure that there is sufficient clearance on the operator and non-operator side.
- Turn off power before maintenance.
- Do not perform maintenance alone.
- Check the electrical cables for any damages.
- Don’t operate this machinery unless you receive formal training.

When the air supply is off the tools will drop down, don’t move the gantry without air supply unless the cutting tools are removed else it may result in damage of cutting table surface.

Setup Procedure

Setting up the Material on the Cutting Zone

- Ensure the Eagle Static cutter is powered on, and initialized using eSuite software.
- Transfer the leading edge of material from the feeding system to the static cutting table.
- Spread material on the static table.
- Ensure that the length of material is straight and parallel with the X-axis. The dust plate can be used as an edge guide.
- Click on the eCut pull down menu and then select “turn Vacuum on”.
- After the material is positioned to the desired location, it is ready for cut.
- Open the file to be cut in eSuite software.

WARNING

Improper depth setting of knife will result in damages to the table surface.

Note

The maximum material thickness to be cut when compressed under vacuum depends on the machine configuration selected and material type.

Setting up the Cut Parameters

The following machine and job parameters should be checked prior to starting a cut job:

- Cutting velocity.
- Cutting acceleration.
- General velocity.
- General acceleration.
- Lift and plunge angle.
- Tool pressure.
- Common line removal (on/off).
- Layer assignment.

Instruction for Aligning, Cleaning and Replacing Consumable Parts

Round Knife Assembly

- Turn the power off to the gantry, use lock out / tag out if required.
- Loosen the two allen head screws on the tool holder.

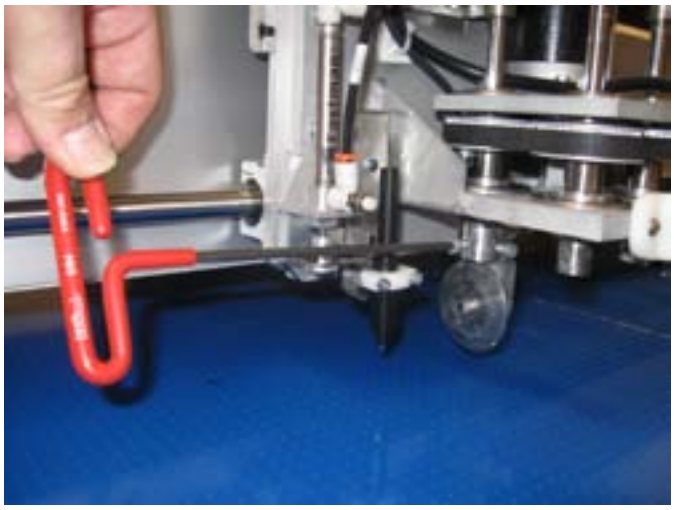

Warning
Always handle knives with care.
Safely dispose of used knive.

- Carefully slide the round knife assembly off the tool head spindle.
- Ensure that the removed round knife assembly is placed in a safe area because it contains sharp ob jects that pose hazards.
- Install new knife assembly on the desired tool head spindle ensuring that the alignment tang is engaged on the spindle.

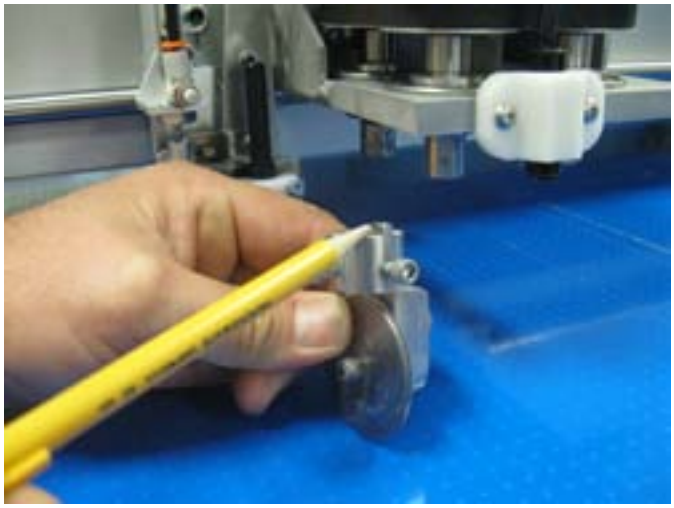

Warning
Always handle knives with care.
Safely dispose of used knive.

- Tighten the two allen head screws on the tool holder to secure it to the tool head spindle.

- If the tool type that is installed on the tool head spindle is different from the one removed than it is important to re-map or change the tool type that is represented in the software to match the one which is installed.
- Power on gantry.

Note: Tools do not need to be recalibrated unless cut accuracy is critical to 0.010" or less. If calibration is needed refer to operator's manual.

Caution: Failing to re-map a tool after changing tool types can result in damage to the cutting surface, tool and or tool spindle. (Example: changing a punch to a drag knife).

Drag Knife Assembly

- Turn the power off to the gantry, use lock out / tag out if required.
- Loosen the two allen head screws on the tool holder.

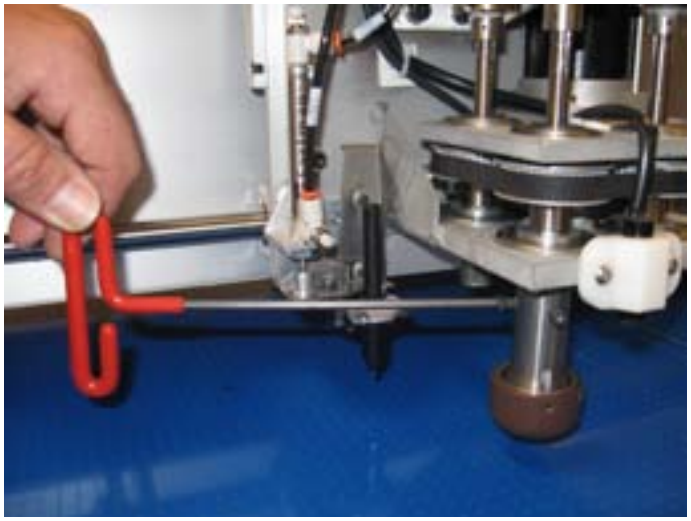

Warning
Always handle knives with care.
Safely dispose of used knive.

- Carefully slide the drag knife assembly off the tool head spindle.
- Ensure that the removed drag knife assembly is placed in a safe area because it contains sharp edges that pose hazards.
- Install new knife assembly on the desired tool head spindle ensuring that the alignment tang is engaged on the spindle.

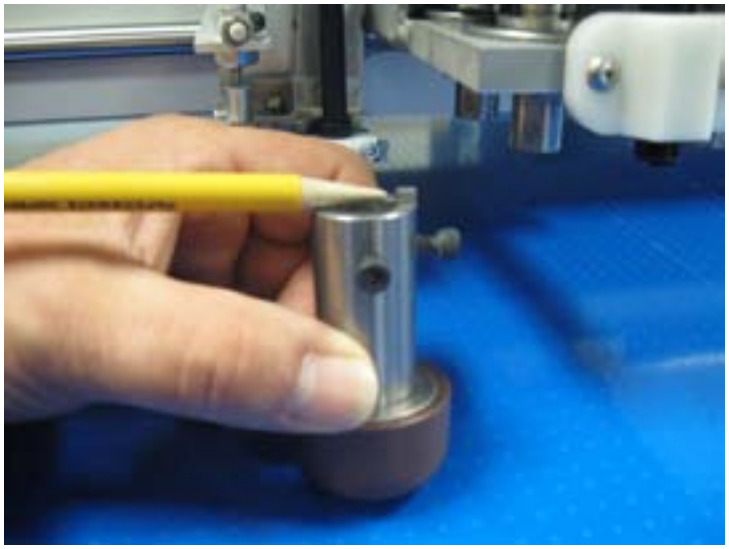

Warning
Always handle knives with care.
Safely dispose of used knive.

- Tighten the two allen head screws on the tool holder to secure it to the tool head spindle.
- If the tool type that is installed on the tool head spindle is different from the one removed than it is important to re-map or change the tool type that is represented in the software to match the one which is installed.
- Power on gantry.

Note: Tools do not need to be recalibrated unless cut accuracy is critical to 0.010" or less. If calibration is needed refer to operator's manual.

Caution: Failing to re-map a tool after changing tool types can result in damage to the cutting surface, tool and or tool spindle. (Example: changing a punch to a drag knife).

Punch Assembly

- Turn the power off to the gantry, use lock out / tag out if required.
- Loosen the allen head screw on the tool holder.

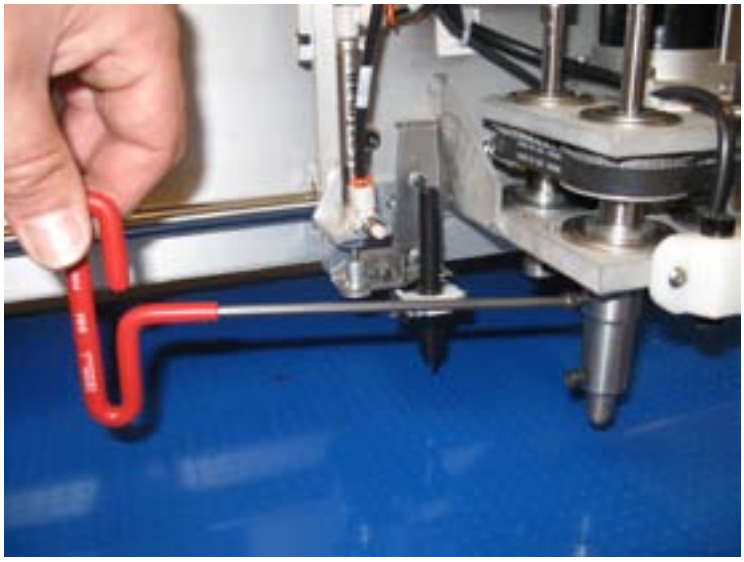

Warning
Always handle knives with care.
Safely dispose of used knive.

- Carefully slide the punch assembly off the tool head spindle.
- Ensure that the removed punch assembly is placed in a safe area because it contains sharp edges that pose hazards.
- Install new punch assembly on the desired tool head spindle ensuring that the alignment tang is en gaged on the spindle.

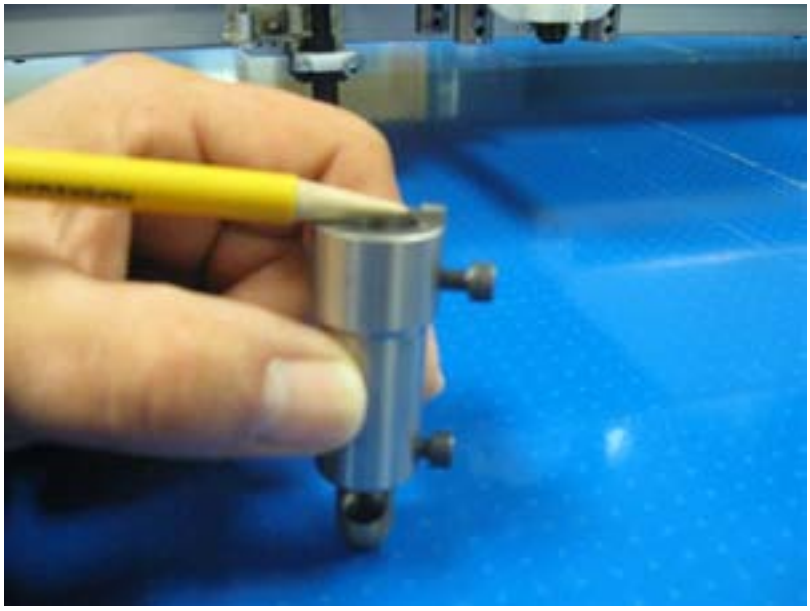

Warning
Always handle knives with care.
Safely dispose of used knive.

- Tighten the allen head screw on the tool holder to secure it to the tool head spindle.
- If the tool type that is installed on the tool head spindle is different from the one removed than it is important to re-map or change the tool type that is represented in the software to match the one which is installed.
- Power on gantry.

Note: Tools do not need to be recalibrated unless cut accuracy is critical to 0.010" or less. If calibration is needed refer to operator’s manual.

Caution: Failing to re-map a tool after changing tool types can result in damage to the cutting surface, tool and or tool spindle. (Example: changing a punch to a drag knife).

Round Knife

- Place the tool holder assembly with the worn round knife to be replaced on the bench mount holder supplied by Eastman.
- The tool holder assembly should be secured on the bench mount holder with the alignment tang en gaged to prevent movement.

Warning
Always handle knives with care.
Safely dispose of used knive.

- Using nut drivers supplied by Eastman loosen the bolt which secures the knife and depth limiters to the holder.

Warning
Always handle knives with care.
Safely dispose of used knive.

Warning
Always handle knives with care.
Safely dispose of used knive.

- Carefully remove the worn knife and replace with a new knife which is supplied by Eastman. Ensure that the depth limiters and new knife are installed in the same sequence as removed. Properly dispose the used/worn knife.

Warning
Always handle knives with care.
Safely dispose of used knive.

Warning
Always handle knives with care.
Safely dispose of used knive.

Drag Knife

- Place the tool holder assembly with the worn drag knife to be replaced on the bench mount holder supplied by Eastman.
- The tool holder assembly should be secured on the bench mount holder with the alignment tang en gaged to prevent movement.

Warning
Always handle knives with care.
Safely dispose of used knive.

- Using allen wrench loosen the two screws found on the depth limiting plastic crown, then remove the depth limiting plastic crown from the tool holder assembly.

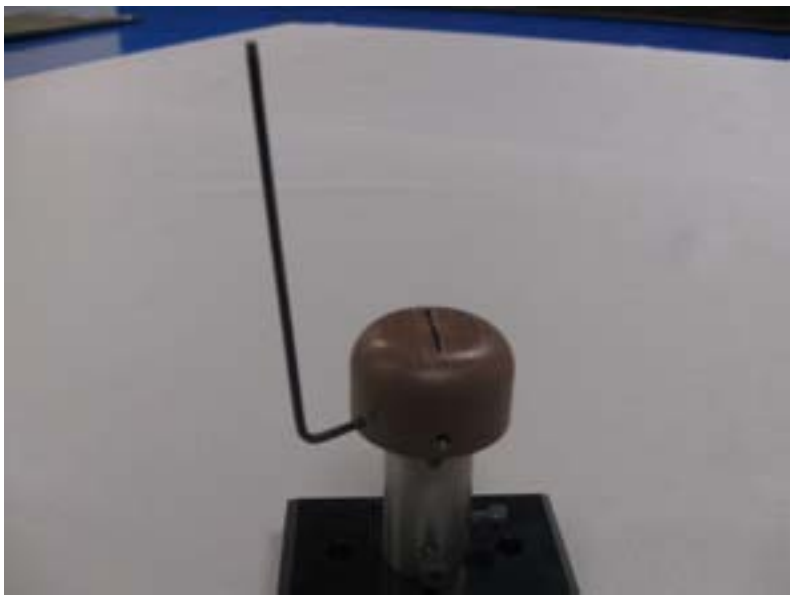

Warning
Always handle knives with care.
Safely dispose of used knive.

- Loosen the set screw that retains the knife in the holder.

Warning
Always handle knives with care.
Safely dispose of used knive.

- Carefully remove the worn knife and replace with a new drag knife. Ensure that the knife is replaced with the sharp edge pointing to alignment tang. Properly dispose the used / worn knife.

Warning
Always handle knives with care.
Safely dispose of used knive.

- If a change in depth of penetration is required for the knife, remove the assembly from bench mount holder, adjust the depth of set screw found inside the tool holder bore using allen key.
- Tightening the screw will result in less blade exposure, loosening the screw results in more blade exposure. It is advised the blade be exposed only enough to cut the material as required else may lead to damages to the cutting surface.

Warning
Always handle knives with care.
Safely dispose of used knive.

- Return the depth limiting plastic crown back on to the tool holder assembly and tighten both screws.

Punch

- Place the tool holder assembly with the worn punch to be replaced on the bench mount holder supplied by Eastman.
- The tool holder assembly should be secured on the bench mount holder with the alignment tang en gaged to prevent movement.

- Using allen wrench loosen the allen head screw which holds the punch to the tool holder.

- Remove the worn punch and replace with new punch.

- Using allen wrench tighten the allen head screw which holds the punch to the tool holder.

Removal of Plotter Pen to replace Pen refill

- Using allen wrench remove the screws which holds the white plastic saddle.

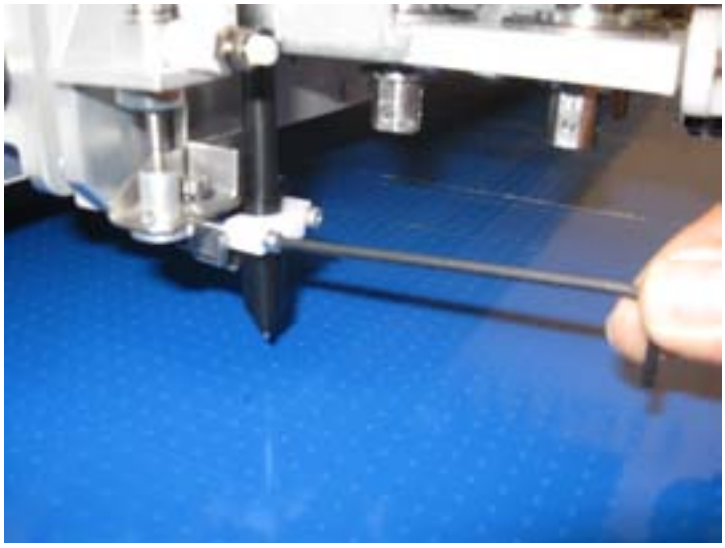

- Remove the plotter pen.

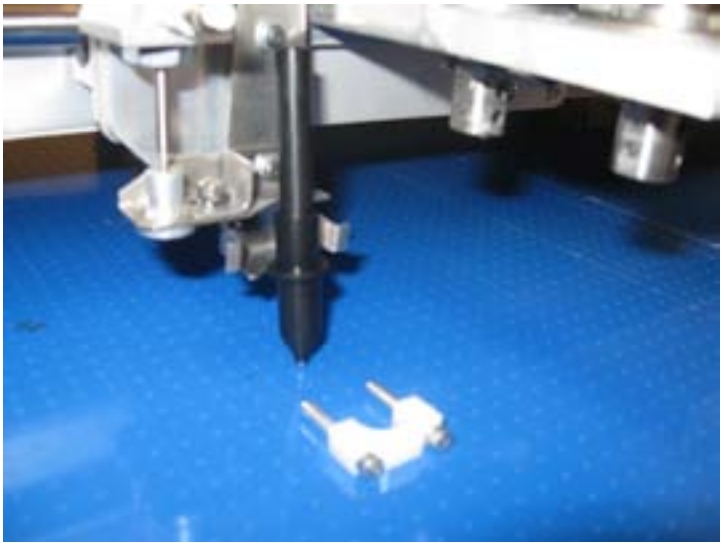

- Unscrew the plotter pen exposing the pen refill.

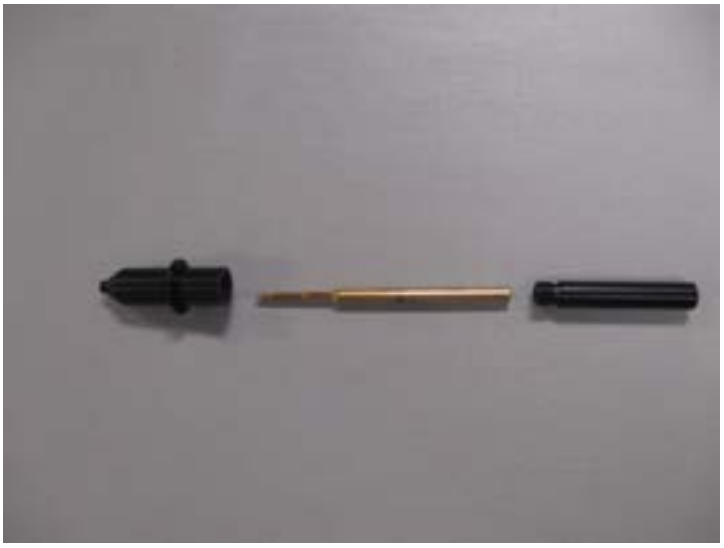

- Replace with new refill.
- Reassemble the plotter pen.
- Return plotter pen and white plastic saddle by mounting and tightening the screws with the allen

Airbrush Ink refill

- When the ink supply runs low, replace the 1/2 pint ink bottle with a fresh bottle of ink. This will eliminate impurities clogging the airbrush.
- If refilling the ink reservoir from gallon containers, the ink reservoir should be drained and cleaned pe riodically depending on the ink usage. This will help avoid thick sediment from forming at the bottom of the ink reservoir.
- Ink should always be shaken before refilling or installing a new ink reservoir.
- The vent hole in the ink reservoir should be closed with the sealing pin when not in use. If the vent hole is not sealed, the ink will thicken and may cause airbrush clogging.

- It is recommended to activate the airbrush at the beginning and end of each shift since the ink is self cleaning ink it will clean the airbrush as it activates and once it is activated.
- If the ink is washable then 6 months shelf period is very important.

Cleaning of Airbrush

The airbrush stylus has been designed for minimum maintenance. The leather packing washers should be lubricated once a month with light oil. Old packing washers cause leakage of air or fluid.

Flush clean solvent through the fluid passage of the stylus and wipe off the outside with clean solvent. Never leave the entire stylus immersed in solvent. Dirty spray caps and tips should be cleaned by soaking in solvent and blow clean with air.

Please note: Never use wire or sharp instruments to clean ports as permanent damage may occur.

Spray Tip and Cap Replacement

1. Remove the Airbrush stylus from tool head.
2. Release needle pressure from the seat of tip, by backing off the fluid adjusting nut.
3. Loosen spray cap nut and remove spray cap and spray tip. Leave needle in place.
4. Check cap and tip size. Install new cap and tip. Note: use only matching size cap and tip.
5. Secure spray cap nut.

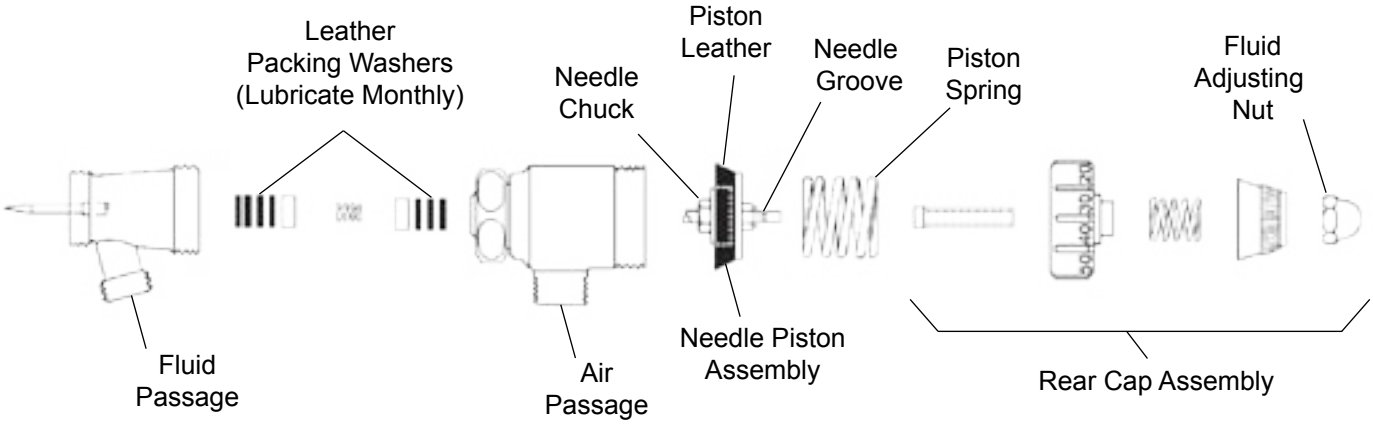

Needle Removal

1. Remove the Airbrush stylus from tool head.
2. Release needle pressure from the seat of tip, by backing off the fluid adjusting nut.
3. Remove the rear cap assembly.
4. Using a pair of pliers, grip the needle piston assembly nut and pull the assembly out.
5. Loosen the needle chuck and slide needle out.
6. Replace needle to desired position and secure needle chuck.
7. Reassemble in reverse order.

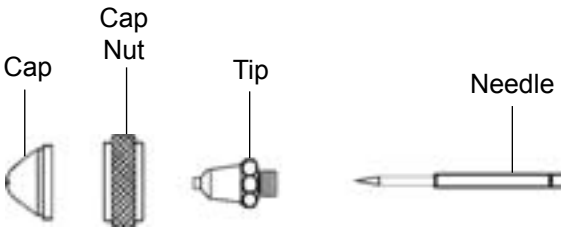

Needle Setting

Ink should be mixed thoroughly and always strained through a lint free cloth or fine mesh strainer before using.

The needle-piston assembly has a needle chuck which locks the needle in position. The single groove on the shank of the needle indicates location at which to lock the piston. Lock piston slightly below mark for use with very heavy fluids and slightly above mark (nearer blunt end) for light fluids.

Ex: Eastman MP style ink requires the groove to be completely covered.

Launching a Cut

- Open the file to be cut in the eSuite Software.
- Verify that the start point and cut direction for all parts is correct for the file being cut.
- Send the cut file to gantry by pressing the “Cut” icon in the eSuite.
- Position the laser pointer on the material where you intend to begin the cut.
- Press the “Zero” button found on the right edge of UIT panel.
- Press the “Next” button on the right edge of UIT panel to begin cutting of material.

Calibration Procedure

The calibration procedures are used to calibrate the machine so that each piece is cut to the correct shape and size. The calibrations are initially done at machine installation and should only need to be calibrated if there is a cutting problem or modifications done to the machine.

Order of Calibration

Checks before Calibration

- Clear all material from table surface.
- Open eSuite software and “Zero the Table”.

Tools Required

Operator Maintenance Operations

The maintenance operations should be carried out as per the guidelines/instructions mentioned within the ser vice manual. Additionally maintenance operations should be performed safely using lockout / tag out procedures as required.

The replacement of consumable items can be performed by the operator with little disassembly. It is advised to schedule the replacement of consumables during periods of machine idle time or as required.

In case of failure of any consumable item it is possible to interrupt the cut file, replace the failed item and re sume the cut file. In this scenario the operator should follow the procedures as described within this section.

Inspecting the Safety Devices

Frequency: Weekly and when all major maintenance operations are performed.

Tools Required: None.

Maintenance condition: Fully powered with initiation of “Eastman Pro Software”.

Inspection Items

All safety features in the machine are designed to protect the operator through a combination of interruption of power, disabling of components and stopping of motion.

Emergency Stop Buttons (E-Stop)

There are four red emergency stop buttons located on the machine. One on either side of the gantry and the remaining on operator side of the machine.

To check the functionality of E-Stop buttons, the following steps outline the procedure.

a) The machine should be fully powered on with “Eastman Pro Software” activated.

b)Push one of the E-Stop buttons, when activated the depressed button will be illuminated. Verify mo tor power is shut off, amplifiers are disabled and outputs are reset.

c) Pull the E-Stop button back to its operational position and re-enable the Eastman Pro Software.

d) Repeat step b and c for all the remaining E-Stop buttons.

Pause Buttons and Stop Discs

The pause buttons share the same functionality with the stop discs. When activated they stop all motion. While the machine is paused the system continues to monitor positions so that software restart is possible.

To check the functionality of Pause Buttons, the following steps outline the procedure.

a) The machine should be fully powered on with “eSuite Software” activated.

b) Load a file in the Eastman Pro software, turn off the tool enable switch, send cut file to gantry and position the laser pointer on the material to be cut. Press the “Zero” and “Next” buttons on the UIT panel and then wait for the motion to begin.

c) Push one of the Pause buttons, when activated the depressed button will be illuminated. The ma chine will enter a pause state.

d) To resume the cutting operation press “Next” on the UIT or press the green start button on the push button station.

e) Repeat step c and d for the remaining pause button.

To check the functionality of stop discs, the following steps outline the procedure.

a) The machine should be fully powered on with “eSuite Software” activated.

b) Push one of the stop discs, when it is pushed from either side it will pause the cutting action and the pause push button illuminates.

c) To resume the cutting operation the pause disc must be returned back to center, detented position and visually confirm the same when the pause push button light turns off.

d) Repeat step b and c for the remaining Stop Discs.

Limit switches

The ‘X’ limit switches are found on the gantry side plate while the ‘Y’ limit switches are found in the Y-car. The function of the limit switches is to prevent motion of the gantry outside the cutting area by interrupting the power sent to the amplifier. The ‘X’ limit switches are responsible for limiting the motion in the ‘X’ direction, while the ‘Y’ limit switches perform the same in the ‘Y’ direction.

To check the functionality of Limit switches, the following steps outline the procedure.

a) The machine should be fully powered on with “eSuite Software” activated.

b) Instruct the Eastman Pro software to find the limit switches by clicking with mouse on the check limits icon .

⚠ **Warning**

The Gantry will now move under its own power in a controlled fashion to find and establish both the ‘X’ and ‘Y’ limits. The Gantry will travel the entire length of the table as it looks for the limit switches. The Y-Car will also travel along with the gantry looking for the limit switches.

If there are any abnormalities the computer will generate an error message, alerting the operator about the problem.

Maintenance of User Interface Electronics

Frequency: Weekly or as needed as per the machine environment.

Tools Required: A soft cloth and alcohol based cleaning product and compressed air.

Maintenance condition: When the machine is powered off.

Instructions

- Clean regularly with a non abrasive, non-corrosive alcohol product on the following items.
  - Computer Monitor.
  - Keyboard.
  - Touch screen display (UIT).
- Using clean, dry compressed air blow out the filter found on the computer CPU.
- The floor around the machine i.e. safety zones must be kept clean by regular use of vacuum cleaner and to eliminate dust and debris which would interfere with machine performance and filtration systems.

Maintenance of Gantry

Frequency: Weekly.

Tools Required: Lint free cloth, compressed air, lubrication oil (for type refer to Service Manual) and grease gun.

Maintenance condition: When the machine is powered off, lock out / tag out as required.

Instructions

Using clean, dry compressed air blow out the dust and debris from the top of the gantry.

- Using oil saturated cloth wipe down and clean the ‘Y’ axis guide rails.
- Move the Y-Car manually to the ‘Y’ positive and ‘Y’ negative limits inspecting the ‘Y’ rack and ensuring that there are no damaged portions or tight spots.
- Examine the Y-axis E-Chain for damage.
- With the tool head open, gently move the Y-car in the positive and negative slightly, while doing so look for the movement of the large pinion pulley. If an audible clicking is heard and if the Y car moves with out the pulley rotating then there is excessive backlash. If there is no audible noise and there is no movement of Y-car without rotation of pulley, then there is no backlash. If excessive backlash is found please refer to service manual for adjustment and rectification.

- With the electronics cover open physically reach on the electronics tray and with fingers push on belt between the pinion pulley and motor pulley to deflect the belt. If there is excessive belt deflection the belt must be tightened as per the instructions found in the service manual.

- Using oil saturated cloth wipe down and clean the ‘X’ axis guide rails.

- Move the gantry manually to the ‘X’ positive and ‘X’ negative limits inspecting the ‘X’ rack and ensuring that there are no damaged portions or tight spots.

- Reaching under the operator side plate, the large pinion pulley can be found. While holding the gantry in static position slightly rotate the large pinion drive pulley clockwise and counter clock wise and listen for any audible click. In addition if there is pinion movement without gantry movement then there is excessive back lash. If excessive back lash is found please refer to service manual for instructions. Repeat the same procedure for non-operator side plate.

- Remove the gantry operator side plate end cover from the gantry. Remove the six screws which hold the UIT panel. Next you find the four screws that lock the swing out electronics tray. Remove these screws and swing open the electronics tray exposing the ‘X’ drive belt. Using fingers push on the ‘X’ drive belt in the middle i.e. between the large and small pulley to cause the belt deflect. If deflection is found refer to the service manual for adjustment instructions. Repeat the same procedure for non-operator side end cover.

- Examine the X-axis E-Chain for damage.

- Use grease gun to lubricate the X-axis linear bearings.

- Using dry compressed air blow out and clean the electronic filter found on the electronics cover of the Y-car.

- Using a clean dry compressed air blow out any debris found under the electronics cover, around the amplifiers or power supplies.

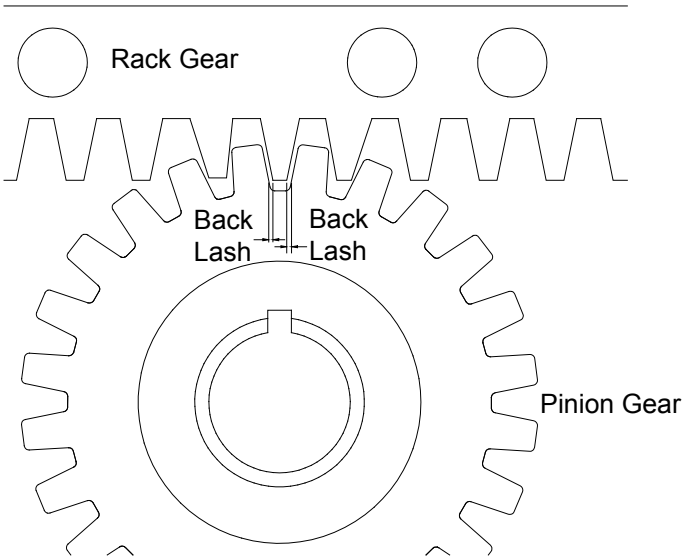

Maintenance of Cutting Surface

Frequency: Weekly or as required.

Tools Required: Hand held vacuum (shopvac), clean dry rag, hot glue gun and hot glue stick, small air surface grinder.

Maintenance condition: machine powered off, lock out / tag out as required.

Instructions

- Any large deep cuts found in porex should be addressed to maintain cut quality. In order to do so please follow the following instructions.

  1. Clean the cut of any debris found within.
  2. take a sharp utility knife and create a small chamfer on both edges of the porex at the cut.
  3. using the hot glue gun melt in a small portion of hot glue stick to fill and weld both the edges of the cut together.
  4. using the small air-power surface grinder remove any excess hot glue stick to return to a smooth cutting surface.

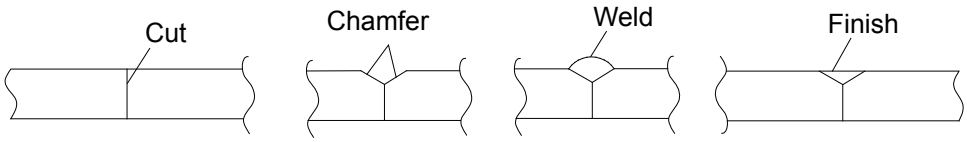

Maintenance of Tool Head

Frequency: weekly or as required.

Tools Required: clean dry compressed air, soft cloth, alcohol based cleaning product, assorted allen wrenches, grease.

Maintenance condition: machine powered off and air supply disconnected.

Instructions

- Using appropriate size allen wrench remove mounting hardware securing the tool head cover and re move the tool head cover.
- Using compressed air blow off any dust and debris built-up on tool head surfaces.
- Inspect theta motor cable and connector for any damage.
- Inspect the theta drive belt for belt condition and proper belt tension, adjust as required. Refer to service manual if required.
- Check for any worn or damaged air supply lines.
- Using soft cloth that is saturated with cleaning solution wipe down all surfaces including the spindle shafts.
- Physically move each tool head spindle up and down to check for bent or damaged spindles.
- Using a small portion of the clean cloth apply a thin coat and grease to the spindles found in the tool head.
- Check that the top hats are securely fastened to the spindle shaft, tightened as required.
- Check that all tools are sharp and properly aligned and adjusted.
- Inspect the laser point is working and focal length is adjusted.
- Ensure that the pen is moving freely up and down and replace the pen refill as required.
- Return the tool head cover and attach the hardware.
- When the tool head is removed and replaced after service, check the tightness of the screws which hold the tool head and also the screws fastening the tool head to the gantry.

Notes

Service Record

Machine Serial No.:_____
Machine Voltage: _____
Date of Purchase:_____

Date	Type of Service Performed

Eastman®
Over a Century of Cutting Expertise

Eastman®

TECHNICAL DATA
Eastman® Eagle C125

Eagle C125

Maximum Gantry Speed ……..	60 in/sec (152 cm/sec)
Maximum Conveyor Speed ……..	12 in/sec (30 cm/sec)
Maximum Table Length …….....	36 ft (11 m)
Cut Accuracy * …….....….	+/- 0.010 in (0.025 cm)
Gantry Weight …….....	260 lbs (118 kg)
Machine Voltage (3 Phase).....	208/220/400/440/575 VAC
Blower Operating Voltage ……..	220/440 VAC, 3 Phase 50/60Hz
Power Requirement .....……..	220v, 20A
Minimum Operating Pressure ……	75 psi
Volume of Air Service …….	5 SCFM
Minimum Temperature..... ……	55° non-condensing
Power Consumption .....……..	Gantry 3.6KVA
.....	Blower 3.5KVA

Information based on a standard 72" Maximum cutting capacity machine.
* Relative to the type and quality of fabric, Cutting speed, Pulling mode, Operational Settings etc.

Machine Size	Working Width	Table Width (including Rack and Rail)	Overall Machine Width
72" (183 cm)	70.6" (179 cm)	84" (213 cm)	105" (267 cm)
78" (198 cm)	76.6" (194 cm)	90" (229 cm)	111" (267 cm)
84" (213 cm)	82.6" (210 cm)	100-1/4" (255 cm)	111" (282 cm)
126" (320 cm)	124.6" (317 cm)	142-1/4" (362 cm)	153" (389 cm)
156" (396 cm)	154.6" (393 cm)	172-1/4" (483 cm)	183" (465 cm)

Limited Warranty. Eastman warrants to the buyer that the equipment shall be free from defects in materials or workmanship for a period of 180 days commencing on the date of invoice. Any goods or parts claimed by the buyer to be defective must be returned to Eastman, freight charges prepaid, within the 180-day warranty period. If Eastman determines that the goods or parts are defective in materials or workmanship, Eastman's sole obligation under this warranty shall be, at Eastman's sole option, to repair or replace the defective goods or parts or to provide the buyer a credit equal to the portion of the purchase price allocable to the defective goods or parts. This warranty shall not apply if defects are caused by product misuse or neglect, if the machine has been altered or modified by the buyer, or if other than genuine Eastman belts, emery wheels, knives or parts are used in the machine. THIS WARRANTY IS THE ONLY WARRANTY APPLICABLE TO THIS PURCHASE. SELLER DISCLAIMS ALL OTHER WARRANTIES, EXPRESS OR IMPLIED, INCLUDING, BUT NOT LIMITED TO, THE IMPLIED WARRANTIES OF MERCHANTABILITY AND FITNESS FOR A PARTICULAR PURPOSE.

Limitation of Liability. Eastman's liability to the buyer, and the buyer's remedies from Eastman, whether in contract, negligence, tort, under any warranty or otherwise, shall be limited to the remedies provided in the foregoing Limited Warranty. In no event shall Eastman have any responsibility or liability to the buyer for (a) any special, indirect, incidental, or consequential damages, including, but not limited to, loss of use, revenue, or profit, even if Eastman has been advised of the possibility of such damages, or (b) any claim against the buyer by any third party. The price stated for the product sold is a consideration for limiting Eastman's liability.

Eastman®

Over a Century of Cutting Expertise

779 Washington St., Buffalo, N.Y. 14203-1396 U.S.A. • (716)856-2200 • Fax (716)856-1140 or (716)856-2068
Manufacturers of Eastman Cloth Cutting and Cloth Spreading Machines
www.EastmanCuts.com

©2017 Eastman Machine Company Printed in U.S.A. 3/2017